Fiberglass LED Pool Light / LED Luces de Piscina





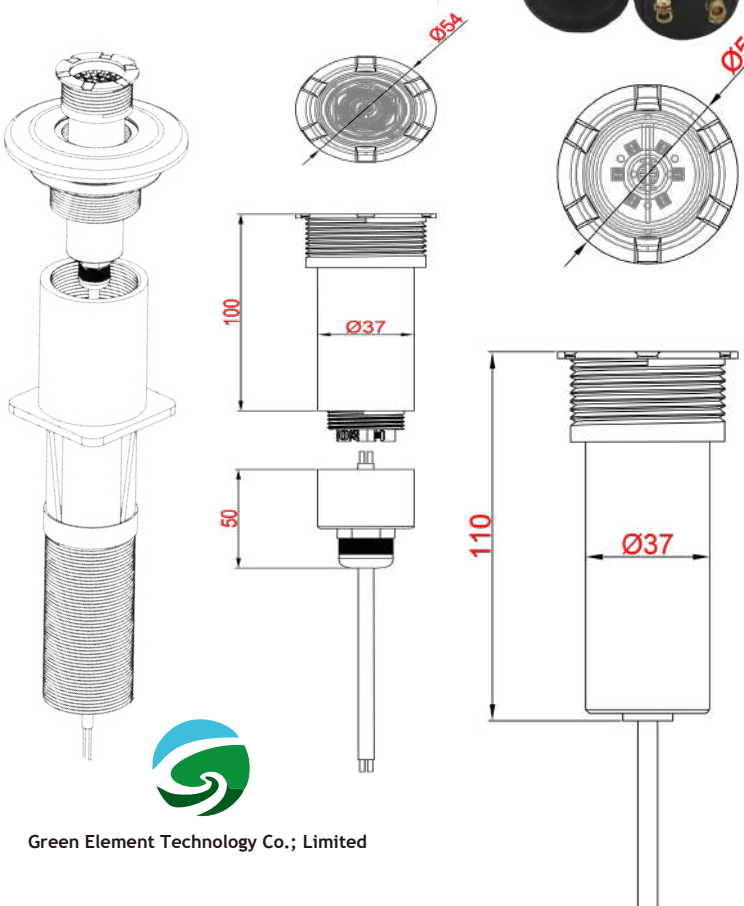

GR-Liner LED Pool LightE-15W with 2pins 4 pins 5 pins or with cable optional

- Dimension: Ø54mm*110mm
- Material: ABS&PC
- Quantity of LED: 6PCS LEDs
- Voltage: AC12V/DC12V
- Color: warm white, cool white, blue, RGB,RGBW
- Power: 9W/12W/15W/18W
- Advantage: resistant to chlorine, salt and pool chemicals

- Medidas: Ø54mm*110mm
- Material: ABS&PC
- Número y Tipo de LEDs: 6PCS LEDs
- Tensión Nominal: AC12V/DC12V
- Temperatura Luz: blanco cálido, blanco frío, azul y RGB
- Potencia: 9W/12W/15W/18W
- Ventaja: permanecer a cloro, sal y química para piscina

RGB+W+C RGB+W RGB CW WW Blue

CE IP68 RoHS Wi-Fi

Green Element Technology Co.; Limited

Fiberglass LED Pool Light / LED Luces de Piscina

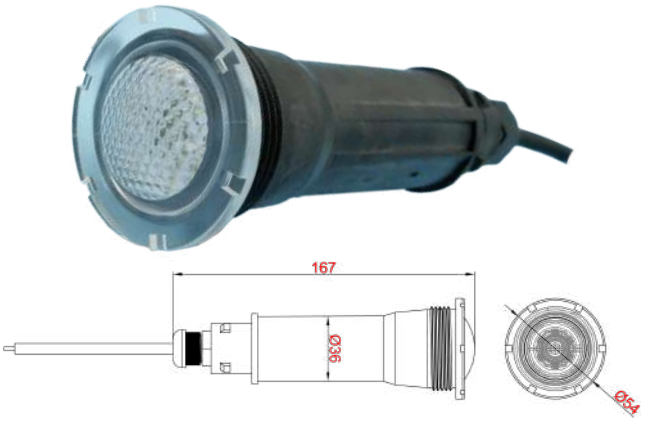

GR-Liner LED Pool Light-A-15W

- Dimension: Ø54mm*167mm
- Material: ABS
- Quantity of LED: 6PCS LEDs
- Voltage: AC12V/DC12V
- Color: warm white, cool white, blue, RGB,RGBW
- Power: 9W/12W/15W/18W
- Advantage: resistant to chlorine, salt and pool chemicals

- Medidas: Ø54mm*167mm
- Material: ABS
- Número y Tipo de LEDs: 6PCS LEDs
- Tensión Nominal: AC12V/DC12V
- Temperatura Luz: blanco cálido, blanco frío, azul y RGB
- Potencia: 9W/12W/15W/18W
- Ventaja: permanecer a cloro, sal y química para piscina



GR-Liner LED Pool Light-B-15W

- Dimension: Ø55mm*145mm
- Material: ABS
- Quantity of LED: 6PCS LEDs
- Voltage: AC12V/DC12V
- Color: warm white, cool white, blue, RGB,RGBW
- Power: 9W,12W,15W,18W
- Advantage: resistant to chlorine, salt and pool chemicals

- Medidas: Ø55mm*145mm
- Material: ABS
- Número y Tipo de LEDs: 6PCS LEDs
- Tensión Nominal: AC12V/DC12V
- Temperatura Luz: blanco cálido, blanco frío, azul y RGB
- Potencia: 9W/12W/15W/18W
- Ventaja: permanecer a cloro, sal y química para piscina



GR-Liner LED Pool Light-C-15W

- Dimension: 50mm*147mm
- Material: ABS
- Quantity of LED: 6PCS LEDs
- Voltage: AC12V/DC12V
- Color: warm white, cool white, blue, RGB,RGBW
- Power: 9W/12W/15W/18W
- Advantage: resistant to chlorine, salt and pool chemicals

- Medidas: 50mm*147mm
- Material: ABS
- Número y Tipo de LEDs: 6PCS LEDs
- Tensión Nominal: AC12V/DC12V
- Temperatura Luz: blanco cálido, blanco frío, azul y RGB/RGBW
- Potencia: 9W/12W/15W/18W
- Ventaja: permanecer a cloro, sal y química para piscina



GR-Liner LED Pool Light-D-15W

- Dimension: 55mm*145mm
- Material: ABS
- Quantity of LED: 6PCS LEDs
- Voltage: AC12V/DC12V
- Color: warm white, cool white, blue, RGB,RGBW
- Power: 9W/12W/15W/18W
- Advantage: resistant to chlorine, salt and pool chemicals

- Medidas: 55mm*145mm
- Material: ABS
- Número y Tipo de LEDs: 6PCS LEDs
- Tensión Nominal: AC12V/DC12V
- Temperatura Luz: blanco cálido, blanco frío, azul y RGB/RGBW
- Potencia: 9W/12W/15W/18W
- Ventaja: permanecer a cloro, sal y química para piscina

RGB+W+C RGB+W RGB CW WW Blue CE IP68 RoHS Wi-Fi

Green Element Technology Co.; Limited