Salt Generator User Manual



Touch Screen Series



LED Series

*First of all, we express our most sincere gratitude to you choosing our products.
*Please be sure to carefully read this manual before using.
*Please put the instructions in the position easy to get and please keep it properly.
*To learn more, please scan the QR code on the left.

Green Element

VER: Jul 2026

Models

GR-SaltMax-Touch Screen-15g/h	GR-SaltMax-LED-15g/h
GR-SaltMax-Touch Screen-20g/h	GR-SaltMax-LED-20g/h
GR-SaltMax-Touch Screen-25g/h	GR-SaltMax-LED-25g/h
GR-SaltMax-Touch Screen-30g/h	GR-SaltMax-LED-30g/h
GR-SaltMax-Touch Screen-35g/h	GR-SaltMax-LED-35g/h
GR-SaltMax-Touch Screen-40g/h	GR-SaltMax-LED-40g/h
GR-SaltMax-Touch Screen-45g/h	GR-SaltMax-LED-45g/h
GR-SaltMax-Touch Screen-50g/h	GR-SaltMax-LED-50g/h

Index

1. Special Notes 1
2. Electrical safety 1
3. Safe Pool Sanitizing Working Principle 2
4. Product Features 2
5. Model Chart 3
6. Structure Diagram 3
7. Dimensional drawing (unit:mm) 6
8. Recommended water chemistry level 8
9. Electrode Cycle Period 8
10. Salt Level 9
11. Addition and Removing Salt in the Swimming Pool Water 10
12. Installation schematic diagram 11
13. Installation Guide 11
14. Control panel 17
15. Preparations before use 18
16. LED Series Operation Guide 19
17. Touch Screen Series Operation Guide 24
18. Daily maintenance of generator 33
19. Winter maintenance 33
20. Electrolytic cell cleaning guide 34

1. Special Notes



All the products marked with this symbol indicate that the product shall not be mixed or disposed with your household waste at their end of use. It is responsibility of the user to eliminate this kind of wastes depositing them in a recycling point adapted for the selective disposal of electrical and electronic wastes. The suitable recycling and treatment of these wastes contributes in essential way to the preservation of the Environment and the health of the users. For further information regarding the points of collection of this type of wastes, please contact to the dealer where you acquired the product or to your municipal authority.

1.1 Warning

① All electrical connections must be carried out by a qualified approved electrician in accordance with the standards currently in force in the country of installation or,failing this, in accordance with the international standard IEC 60364-7-702.

② Before any maintenance or operation,ensure that the salt generator is power unplugged, all machinery are turned off and power source is turned off.

③ Installation personnel must carefully read this manual before installation.If any improper or mistaken operation occurs,please contact the nearest authorized dealer or contact technical support department.

④ When parts are damaged, please prioritize the purchase of the replacement part at the manufacture or authorized dealer.

⑤ To reduce the risk of injury,do not allow children to use this product.

⑥ Service person should only be qualified pool service professionals.

2. Electrical safety

2.1 Qualified electrician

It is strongly recommended to hire a qualified electrician to take care of any electrical work related to the installation of the salt chlorine.They have the expertise to handle electrical connections safely and in compliance with local electrical codes.

2.2 GFCI protection

Ensure generator and associated electrical connections are protected by ground fault circuit breakers(GFCI).(GFCI)is an essential safety device that protects against electric shocks in humid environments such as swimming pools.

2.3 Voltage and wiring

Use the correct voltage and wiring recommended by the generator manufacturer.Ensure that the power supply meets the requirements specified in the generator manual.

2.4 Weatherproof

All electrical components,including connections and sockets,should be weatherproof. This prevents water intake and minimizes the risk of electrical hazards.

2.5 Distance from water source

Install electrical components,receptacles and connections at a safe distance from water sources to prevent accidental contact with water.

2.6 Isolation and closure

Installation easily accessible shut-off switch or circuit breaker near the generator.This allows for quick isolation of the power supply during maintenance or emergency situations.

2.7 Check regularly

Check electrical components regularly for signs of wear,damage,or corrosion.Make sure wires and connections are kept secure.

2.8 Safety precautions

- Use appropriate personal protective equipment (PPE)for electrical connection work.Avoid handling electrical components in wet areas to reduce the risk of electric shock.
- The unit must not be operated when there is no water flow in the cell.
- The cell must be located in a well-ventilated environment to prevent the dangerous accumulation of hydrogen gas.
- Never install the cell before the filter because the hydrogen generated could build up in the filter and provoke an explosion.
- The generator must be the last element the water passes through before returning to the pool. Otherwise gas generated in the cell could build up in the circuit and cause an explosion.

3. Safe Pool Sanitizing Working Principle

The generator uses electrolysis to break down the salt (NaCl) in the swimming pool to form Chlorine (Cl2). The control unit of the generator can regulate the chlorine production by altering the electric current flow through the titanium electrode in the cell housing. Chlorine is an effective sanitizing agent which is commonly used in swimming pools,it can inhibit the growth of bacteria and fungi.

$2NaCl+2H_2O=2NaOH+H_2\uparrow+Cl_2\uparrow$

$Cl_2+2NaOH=NaCl+NaClO+H_2O$

4. Product Features

4.1 Convenience and the constant delivery of pure chlorine-based sanitizer.

4.2 No more artificial chemical cleaning agent which could cause skin and eye irritation. You just need to add natural salt in the pool.

4.3 The salt in the water is so little you do not taste or smell the salt.

4.4 The electrode is made of titanium, which is durable and resistant to corrosion.

4.5 Easy to install and operate.

4.6 The water does not have the heavy smell of chlorine because chlorine is not directly added to the pool

5. Model Chart

Working conditions and technical data					
Input Voltage	AC100-240V	Rated Frequency	50/60Hz	Water Pressure	0.05~0.4Mpa
Insulation Resistance	>20MΩ	Waterproof Rating	IPX4	Output Voltage	DC24V
Recommended Salinity: 4000PPM					
Model			Chlorine Output	Recommended Pool Volume	
				Cubic Meters	Gallons
GR-SaltMax-Touch Screen-15g/h	GR-SaltMax-LED-15g/h		15g/h	65-95m³	17-25K
GR-SaltMax-Touch Screen-20g/h	GR-SaltMax-LED-20g/h		20g/h	90-120m³	23-31K
GR-SaltMax-Touch Screen-25g/h	GR-SaltMax-LED-25g/h		25g/h	105-140m³	27-36K
GR-SaltMax-Touch Screen-30g/h	GR-SaltMax-LED-30g/h		30g/h	120-160m³	31-42K
GR-SaltMax-Touch Screen-35g/h	GR-SaltMax-LED-35g/h		35g/h	135-180m³	36-47K
GR-SaltMax-Touch Screen-40g/h	GR-SaltMax-LED-40g/h		40g/h	150-200m³	39-53K
GR-SaltMax-Touch Screen-45g/h	GR-SaltMax-LED-45g/h		45g/h	165-220m³	43-58K
GR-SaltMax-Touch Screen-50g/h	GR-SaltMax-LED-50g/h		50g/h	180-240m³	47-63K

6. Structure Diagram

6.1 Control Box

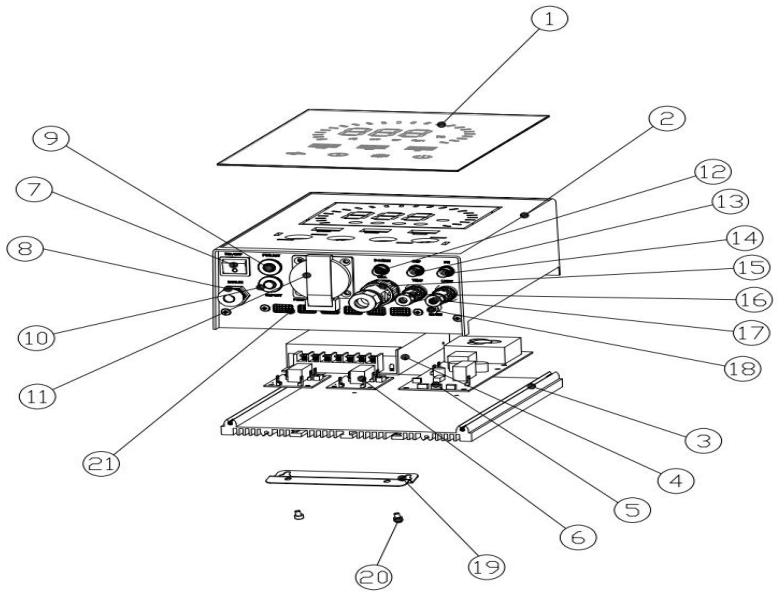

ID	Description	QTY (pcs)	Standard / Optional
①	Glass Cover Plate	1	Standard
②	Front Cover	1	Standard
③	Heat Sink	1	Standard
④	Power Supply	1	Standard
⑤	Driver PCB Board	1	Standard
⑥	Control PCB Board	1	Standard
⑦	ON/OF	1	Standard
⑧	Power Input Cable	1	Standard
⑨	Power Reset Button	1	Standard
⑩	Pump Reset Button	1	Optional
⑪	Pump Power Supply Port	1	Optional
⑫	Dosing Pump Port	1	Optional
⑬	ORP Sensor Port	1	Optional
⑭	PH Sensor Port	1	Optional
⑮	Electrolytic Cell Port	1	Standard
⑯	Temperature Sensor Port	1	Standard
⑰	Pool Light Port	1	Optional
⑱	RS485 Port	1	Standard
⑲	Sheet Metal Hanger	1	Standard
⑳	Screw (M4-8)	12	Standard
㉑	Ventilation Grid	1	Standard

6.2 Electrolytic Cell

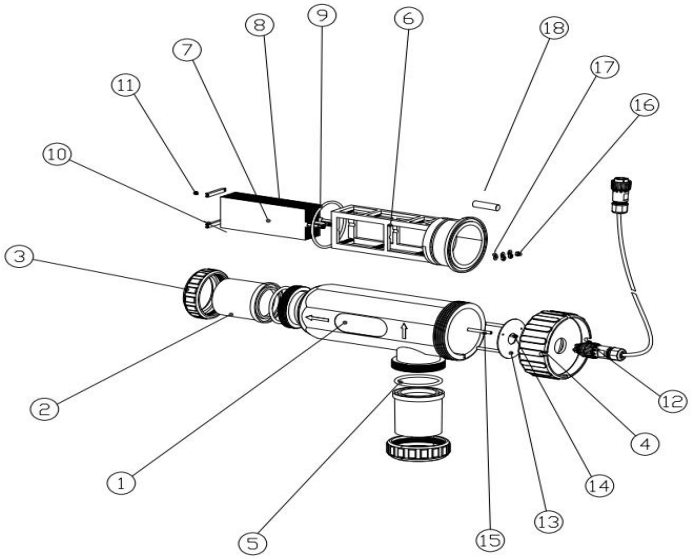

ID	Description	Specification	QTY (pcs)
①	Electrolytic Cell Enclosure		1
②	Adapter	1.5" / 2"	2
③	Recessed Nut		2
④	Back Cover		1
⑤	Sealing O-Ring	ØD71*5	2
⑥	Bracket		1
⑦	Titanium Electrode		10
⑧	Titanium Electrode with Terminal Post		3
⑨	Sealing O-Ring	Ø90*4	1
⑩	Fixing Rod		3
⑪	Plastic Screw	M4*10	4
⑫	Aviation Plug	LD16	1
⑬	Receptacle Mount Plate	D90*4	1
⑭	Round Head Screw	M3*10	3
⑮	Connector Support Rod		3
⑯	Nut	M4	3
⑰	Flat Washer	M4*10	3
⑱	Flow Sensor		1

7. Dimensional drawing (unit:mm)

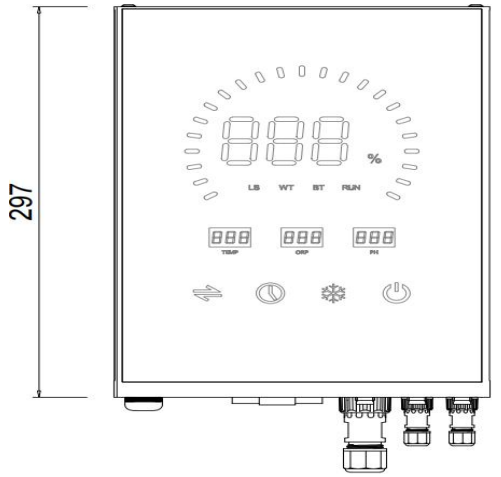

Control Box Front

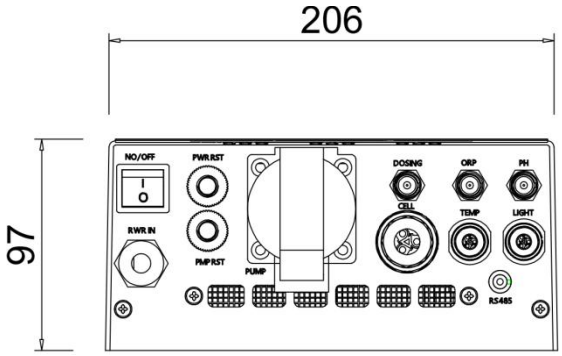

Control Box Bottom

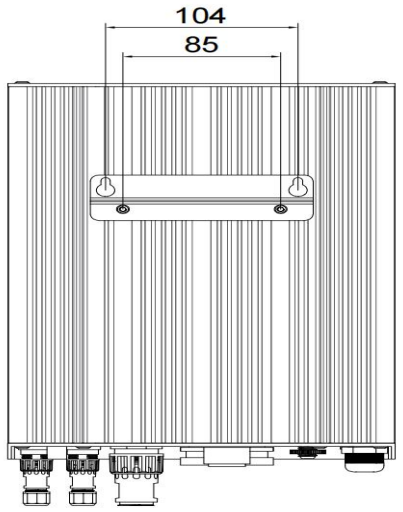

Control Box Back

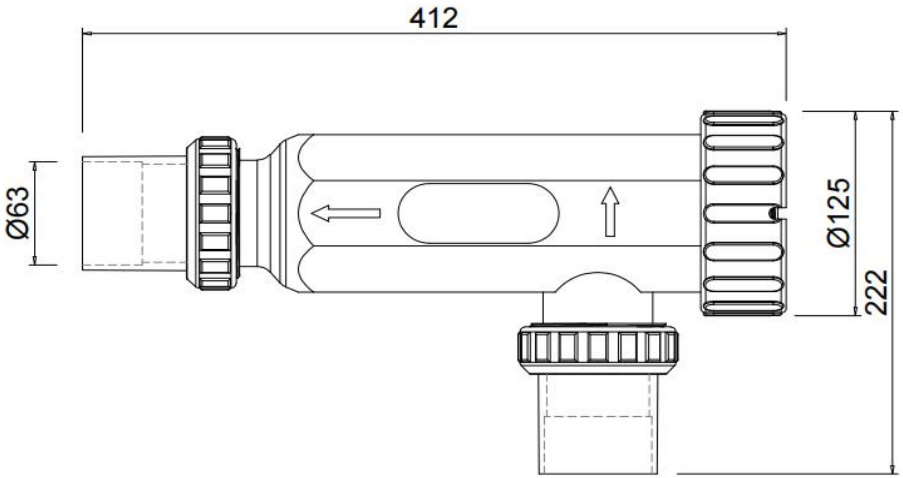

Electrolytic Cell

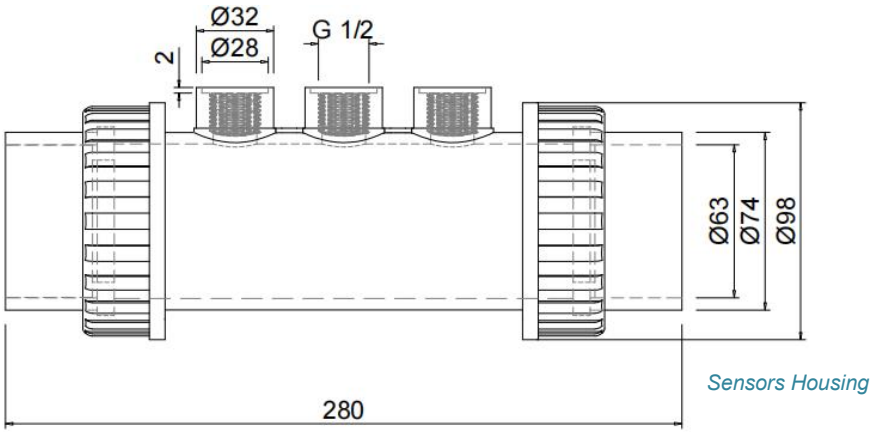

Sensors Housing

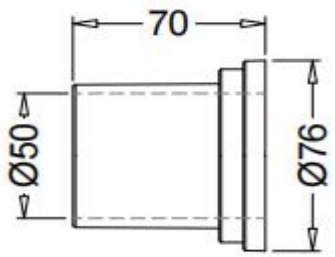

1.5" Adapter

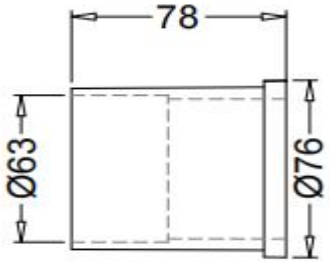

2.0" Adapter

8. Recommended water chemistry level

Before starting the equipment, manual water balancing must be performed. The table below summarizes some recommended concentration levels. You should check the water quality regularly to maintain these levels, which helps minimize corrosion or damage to the surface of the cell.

Salt level	3000-4000 PPM
Residual Chlorine	1.0-3.0 PPM
PH	7.2-7.6
Cyanuric acid(stabilizer)	30-50 PPM
Total Alkalinity	80-120 PPM
Water Hardness	200-300 PPM
Metals	0 PPM
Total Dissolved Solids	<1500 PPM

9. Electrode Cycle Period

9.1 Electrolysis Duration

$$\text{Turnover Rate(Hr)} = \frac{\text{Pool Volume(litre) x Standard Chlorine(g / litre)}}{\text{Chlorine Production Rate(g / hr)}}$$

Standard Chlorine Level not less than 2mg / liter = 0.002g / litre

Example:

Pool Volume:100m³=100000 litre

Chlorine Production Rate (g / hr) = 25g / hr

$$\text{Required Turnover Rate} = \frac{100000 \times 0.002}{25} = 8\text{hr}$$

9.2 Recommended Auto-Clean Time

Electrode reverses polarity every 4 hours.	Hard water area (>350 ppm)
	Electrolysis time ≥ 8 hours
	Water temperature consistently ≥ 30°C
	pH consistently > 7.8
Electrode reverses polarity every 6 hours	Soft water area (<250 ppm)
Electrode reverses polarity every 8 hours	Water chemistry level is within Section 8 specifications

10. Salt Level

If the amount of salt required is 4000 ppm.This means to add directly in the pool water 4kg/m³.

Low concentration of salt(below 2500 ppm) will cause premature cell failure.

High concentration of salt (above 6000 ppm) may cause electro-oxidation and corrosion damage to the stainless steel pool fixtures.

Pool Volume(m³)	Pool Volume(gallons)	Salt (kg)	Salt (Pound)
50	13209	200	440
60	15850	240	529
70	18492	280	617
80	21134	320	705
90	23775	360	793
100	26417	400	881
110	29059	440	970
120	31700	480	1058
130	34342	520	1146
140	36984	560	1234
150	39626	600	1322
160	42268	640	1411
170	44909	680	1499
180	47551	720	1587
190	50193	760	1675
200	52834	800	1763
210	55476	840	1852
220	58118	880	1940
230	60760	920	2028
240	63401	960	2116

Note: Table based on 4000 PPM of salt per m³ of water.If you do not know the volume of the swimming pool, please use the following formula.

Swimming pool shape	M³（pool dimensions,in m）
Rectangular	Length x width x average depth
Round	Diameter x diameter x average depth x 0.785
Oval	Length x width x average depth x 0.893

Type of salt

Use only salt that complies with standard EN16401 and is intended for salt generators. more Specifically,

Use only sodium chloride (NaCl) that is more than 99% pure.

Do Not use the following types of salts:

① Rock salt.

② Salt with more than 1% sodium ferrocyanide.

③ Salt with more than 1% of anti-caking additives.

④ Iodized salt.

11. Addition and Removing Salt in the Swimming Pool Water

- Before adding the salt into the pool,place the multiport valve on "Filtration" or "Recirculation" and then turn the filtration pump on.
- Add the salt directly into the pool or ballast tank and do not allow the salt to sit in a pile on the bottom of the pool.
- keep the filtration system running for 24 hours using the main drain or vacuum suction nozzle as a main suction line.
- As the salt in your pool is constantly being recycled, the loss of salt during the season is minimal. The salt concentration is primarily reduced when the water level must be topped up due to splashing or backwashing, or when rain dilutes the pool water. Salt is not lost through evaporation.

The only way to remove the salt in the pool water is to partially drain the pool and refill with fresh water.

12.Installation schematic diagram

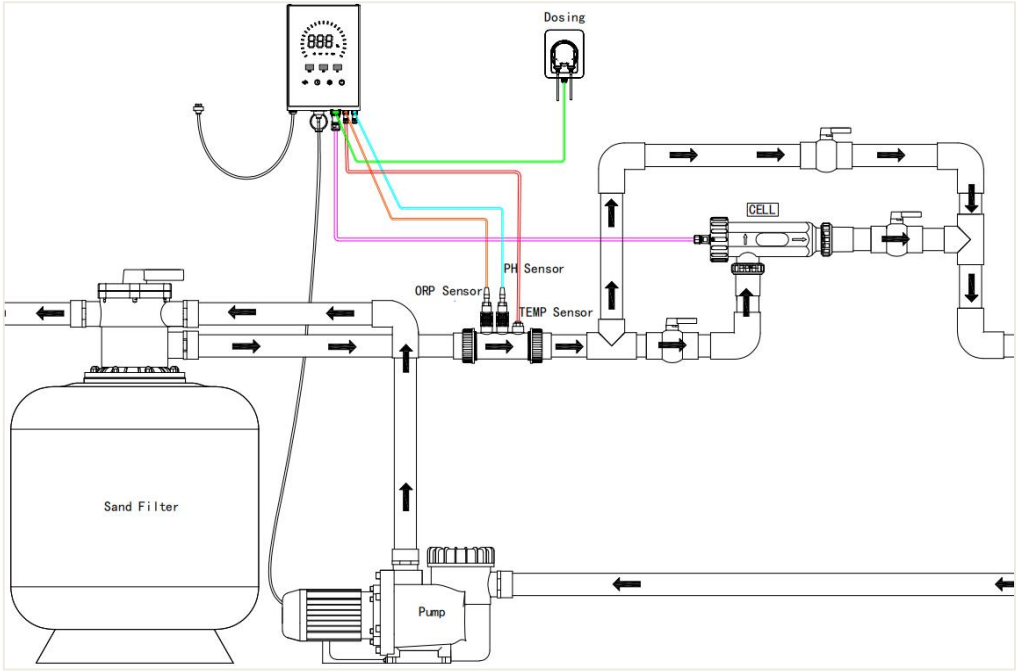

13. Installation Guide

We provide two different specifications of adapters(1.5''and 2.0'') for you. As shown below,before installation, please select appropriate adapter in accordance with the outer diameter of the PVC pipe. please use an adaptor for connection in accordance with the following steps:



1.5'' / 50mm Adapter



2.0'' / 63mm Adapter

13.1 Install the electrolytic cell

13.1.1 Cut the PVC pipe as per dimension.

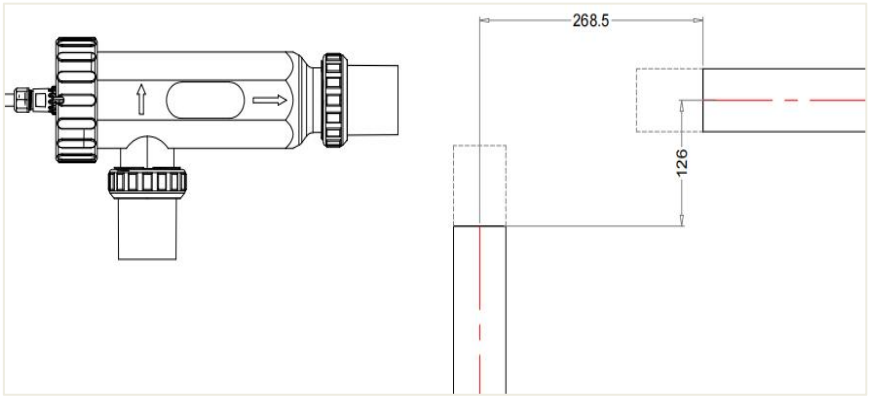

13.1.2 Insert the threaded ring(nut) into the PVC pipe as shown.

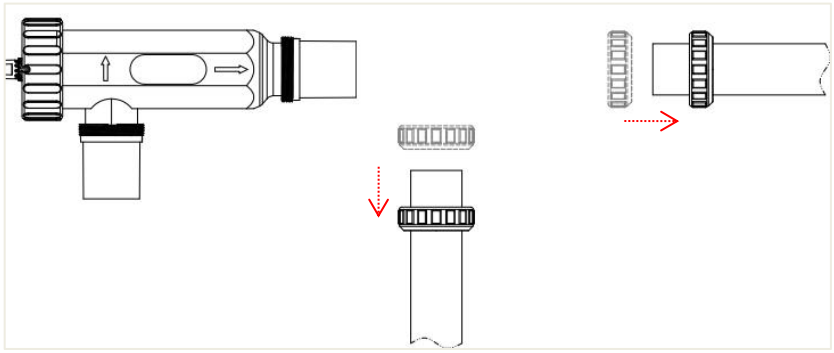

13.1.3 Apply glue to the surface of the pipeline and put the adaptor into the PVC pipe.

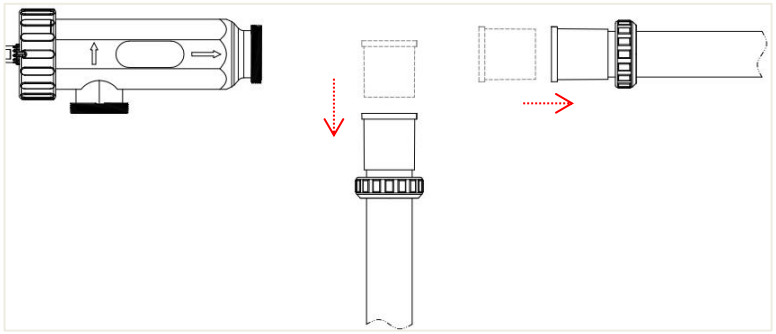

13.1.4 Fit the two seal O-rings (ØD71×5) into the grooves of the adapter respectively.

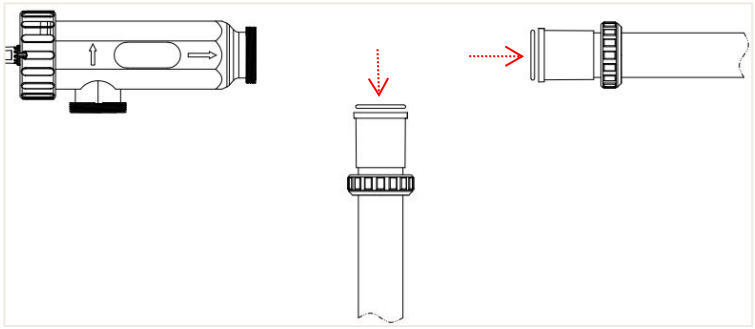

13.1.5 Support the electrolytic cell by hand, align the PVC water inlet and outlet with the two ports of the electrolytic cell in the direction of the arrow, and tighten the threaded ring(nuts).

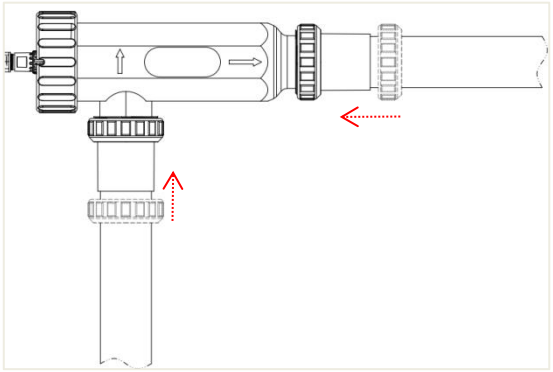

13.2 Install the Sensors (Optional)

13.2.1 The sensor must be mounted at the forward end of the electrolytic cell. The PVC pipe is to be cut strictly in accordance with the dimensions indicated in the figure below. It should be noted that the sensor housing is designed to accept only a 2- inch adapter.

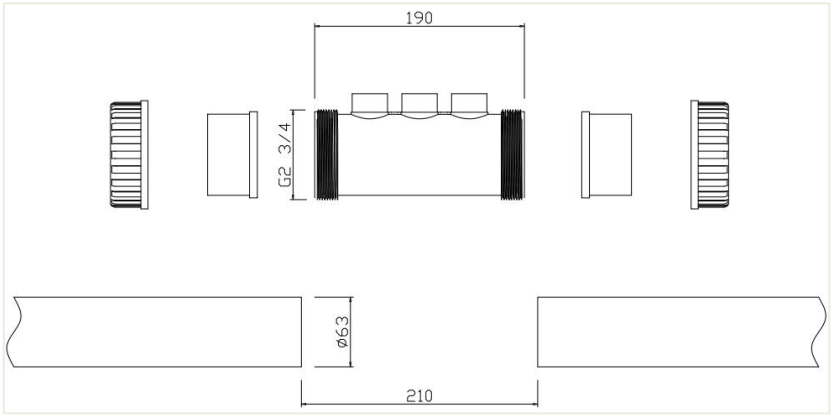

13.2.2 Insert the threaded ring(nut) into the PVC pipe as shown.

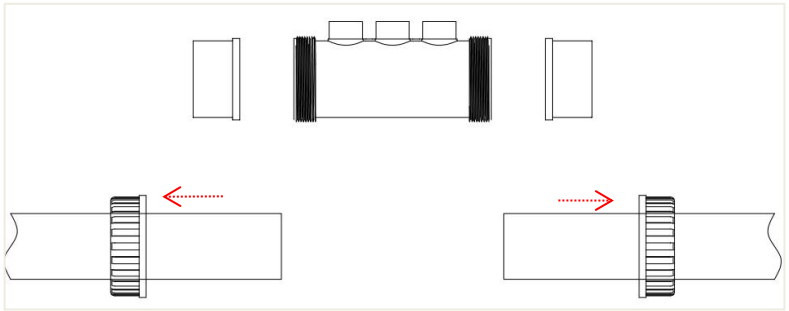

13.2.3 Apply glue to the surface of the pipeline and put the adaptor into the PVC pipe.

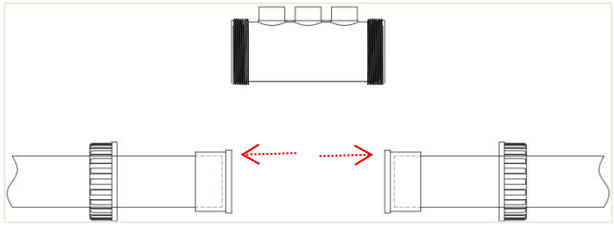

13.2.4 Fit the two seal O-rings (ØD73×3) into the grooves of the adapter respectively.

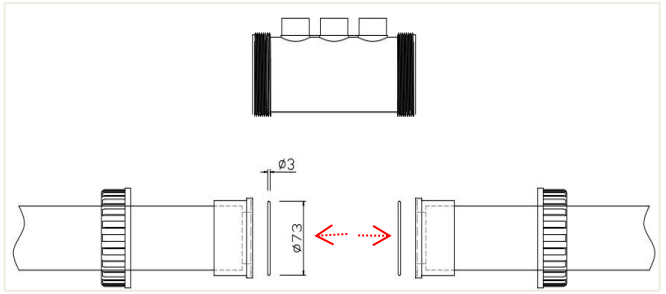

13.2.5 Insert the sensor housing into the PVC pipe and tighten the nut. Note: The sensor ports must face upward.

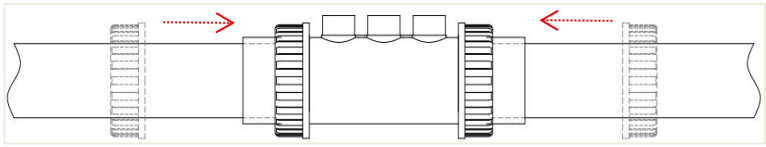

13.2.6 Insert the pH, ORP, and temperature sensors into their respective positions in the sensor housing and tighten. No specific installation order is required.

13.3 Install the Control Box

13.3.1 First, use a 6 mm drill bit to drill two holes horizontally on the wall at the specified spacing. Then, insert two 6 mm plastic anchors into the holes. Finally, drive two M4 screws into the anchors.

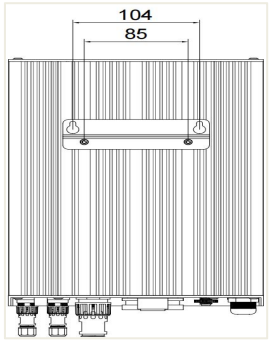

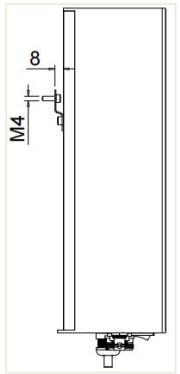

13.3.2 Align the two screw holes on the back of the control box with the two M4 screws on the wall, secure the device to the wall.

13.3.3 Finally, connect the electrolytic cell, sensor, and external relay cables to the corresponding ports on the control box, as shown below. **Note:** Ensure ON/OFF is turned off before performing a leak test on the circulation system.

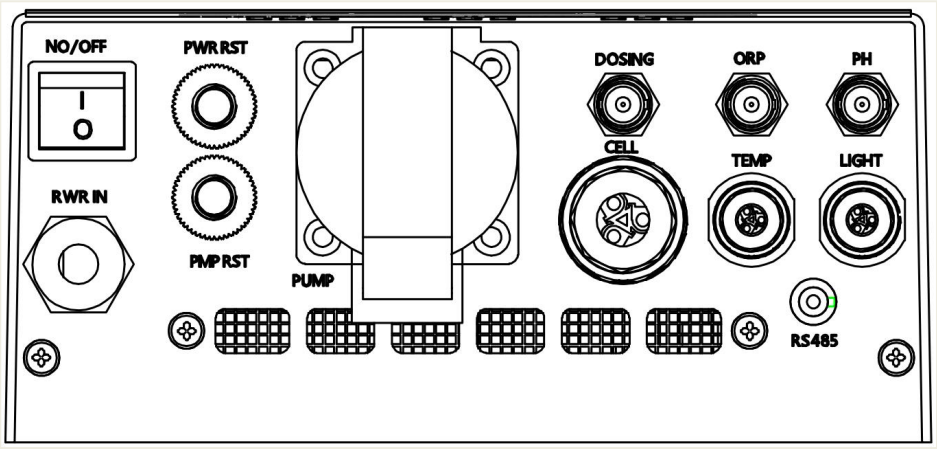

We recommend that you read the installation instructions carefully and install the generator according to the instructions; If you can not install by yourself, seek professional help to avoid improper installation.

13.4 One important note

There may be other components in your pool circulation system such as filters,heating systems, etc.please note that the generator must be installed in the last element of the loop and the water flow direction must be consistent with the water flow indicator on the generator.

Use PVC adhesive to glue the connectors between pipes,and wait for the glue to dry completely according to the drying time indicated on the glue parameter label,and then perform a water leakage test to ensure that there is no water leakage before use.

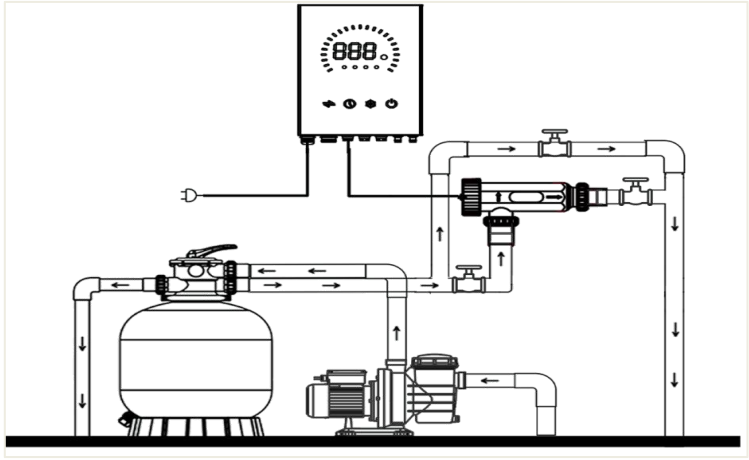

Horizontal Installation Diagram

It is recommended that you use horizontal installation,and use bypass circuit installation,and install water shut-off valves at both ends of the generator ,when it is necessary to clean the electrolytic cell, you only need to open the main water shut-off valves and close the water shut-off valves at both ends of the generator, and then remove the generator without shutting down the circulating pump.

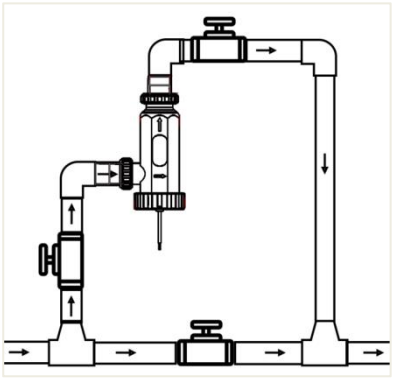

Vertical installation Diagram



Wrong installation

If horizontal installation is not available and vertical installation is selected, follow the installation method shown in the figure and keep the water flow indicator on the generator upward. The water flow direction of the pipe must also be upward. don't install a generator with water flowing downwards.

14. Control panel

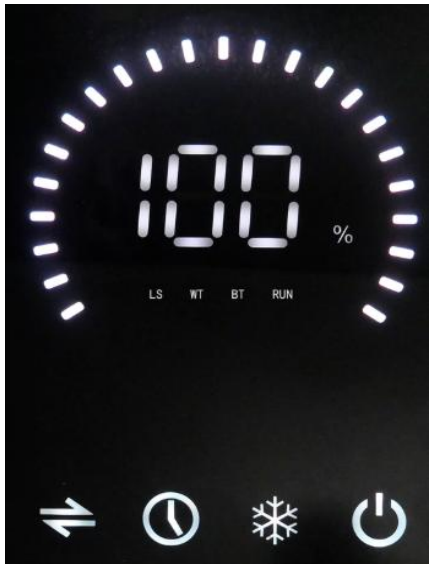

LED Series



Touch Screen Series

14.1 LED Series

	Display Screen	Display the working status of the Device.
Lights	LS	Salt below 2500 PPM: LS light on.
	WT	Winter key pressed: WT light on.
	BT	Wireless communication active: BT light flashes.
	RUN	System running normally: Run light steady.
Keys	 Power	・Hold 3s to power on; 5s to power off. ・In setup: 1s to confirm.
	 Timer	Set daily operating hours.
	 Winter	On/off winter mode.
	 ACT	Set automatic cleaning interval.

14.2 Touch Screen series

Touch Screen		Current chlorine output: xx g/hr.
		Home page: Tap it to return to the main screen.
		Set the operating parameters for pH, ORP, Timer, Cleaning Cycle, and Output(%).
		System Settings: Language, Wireless Connection, Sensors, External Relays, etc.
		Current Date and Time.
		Wireless Connection Status: Bluetooth/Wi-Fi
		Water Quality Status: Very Good / Good / Bad.
		Current water temperature: xx.x °C. Operating range: 10–40 °C.
		Today's continuous runtime: xx.x h / 24 h. The timer resets and restarts after a power outage.
	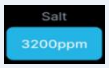	Current salinity: xxxx ppm. Recommended salinity: 4000 ppm.
Keys	 Power	・Hold 3s to power on; 5s to power off. ・In setup: 1s to confirm.
	 Timer	Set daily operating hours.
	 Winter	On/off winter mode.
	 ACT	Set automatic cleaning interval.

15. Preparations before use

15.1 To ensure proper equipment operation, balance the pool water chemistry as specified in Section 8 before turning on the equipment.

15.2 Ensure that the salt concentration of the pool water is within the normal working range (4000PPM).

Notes:

- If the water in the pool is not fresh and/or if it is liable to contain dissolved metals, use a metal remover,according to the manufacturer's instructions.
- If your water has previously been treated with a product other than chlorine (bromine, hydrogen peroxide,PHMB, etc.),neutralize this product or replace all the water in the pool.

15.3 Ensure the water temperature is between 10 and 40 degrees Celsius.

15.4 When the device is installed and connected,open the valve connecting with the salt chlorine generator and close the valve on the main pipeline.Turn on the leakage protection switch.

15.5 Start the pump,ensure that there is water flowing through the salt chlorine generator, and there is no water leakage at each joint,and the water flow switch is closed. (The water flow must meet the following conditions: 2.5m^3/h ≤ water flow ≤15m^3/h).

15.6 The adapter of the device has been connected to the power supply,and the power supply has been turned on.

16. LED Series Operation Guide

16.1 Basic Functions

16.1.1 ON/OFF

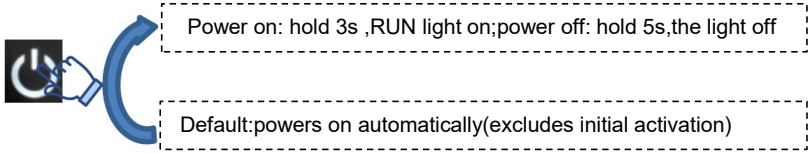

16.1.2 TIMER

To save energy, calculate daily operating hours (4-12h) per formula in Section 9.device memorizes settings for automatic daily operation.

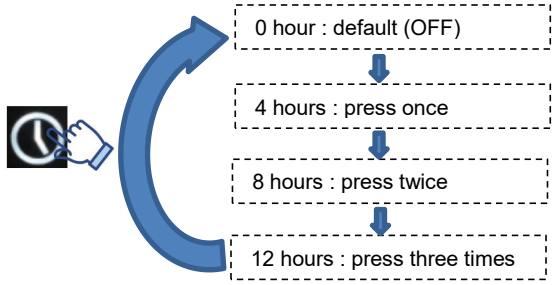

Notes:

- First-time use: Default 0h—must be set.otherwise,device will not start.
- Settings apply after pressing Power key.
- Power loss/shutdown: Timer resets.

16.1.3 WINTER MODE

During winter,Algae and bacteria don't grow well in cold environments,thus, only a small amount of chlorine is needed.

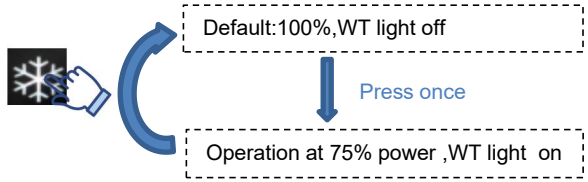

Note: when the water temperature is below 10°C,the device will stop functioning.

16.1.4 AUTO CLEAN FREQUENCY

During operation, the high mineral content in hard water leads to the accumulation of calcium and magnesium scale on the cell, which can reduce efficiency and shorten the equipment's service life. Therefore, it is recommended to set an automatic cleaning frequency according to the requirements of Section 9, which helps dissolve accumulated scale and maintain optimal performance.

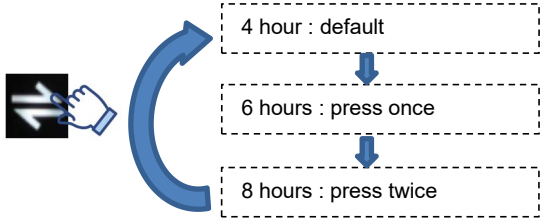

Notes:

- All settings take effect only after pressing the Power key.
- Auto-cleaning will run once after your set interval (e.g., 6 hours).
- Maintain water hardness between 200–300 ppm.
- If auto-cleaning is unsatisfactory, manually clean as described in Section 20.

16.1.5 RS485



PC



RS485 cable

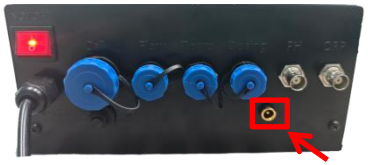

RS485 port

Step 1: Prepare a Windows PC.

Step 2: Remove the RS485 cable from the box.

Step 3: Insert the USB end into a PC USB port and the DC connector into the device's RS485 port.

Step 4: Open the host software on the PC, click "Connect". The following screen indicates a successful connection.

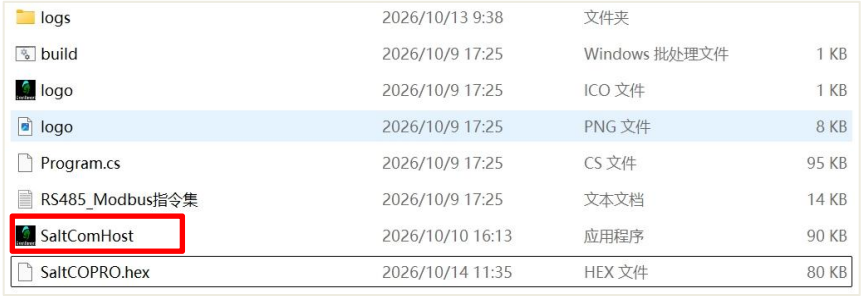

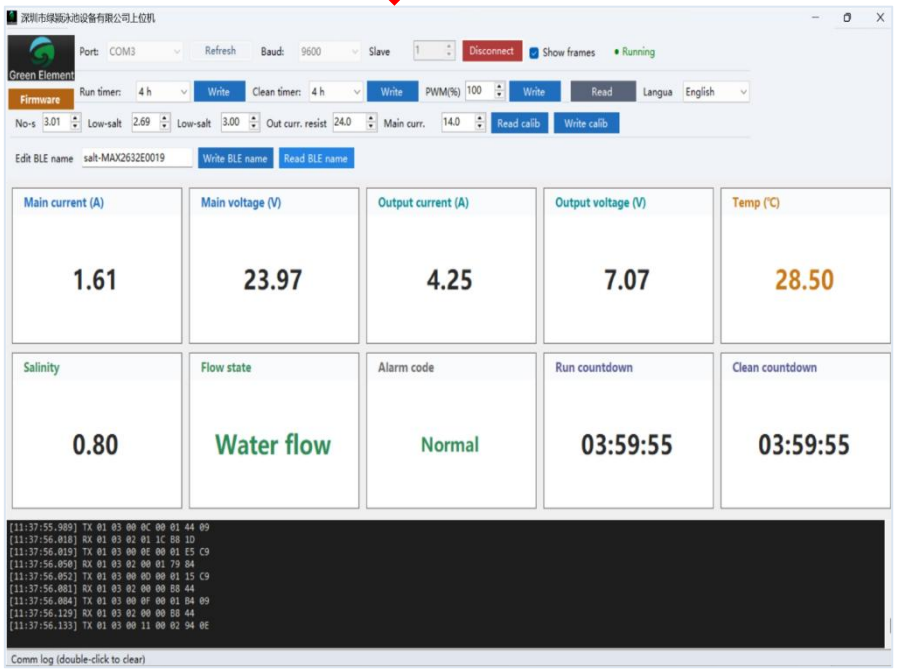

Step 5: To help you understand, the figure below is divided into two areas:

- Area A (Function Area): Modify device operating parameters, including Timer, Auto Clean Countdown, Output (0–100%), Low Salt Alarm Limits (upper/lower), Firmware Update, etc.

Area B (Status Display Area): Displays current device status, such as Voltage, Current, Runtime & Auto Clean Countdown, Salinity, Water Temperature, Alarm Messages, etc.

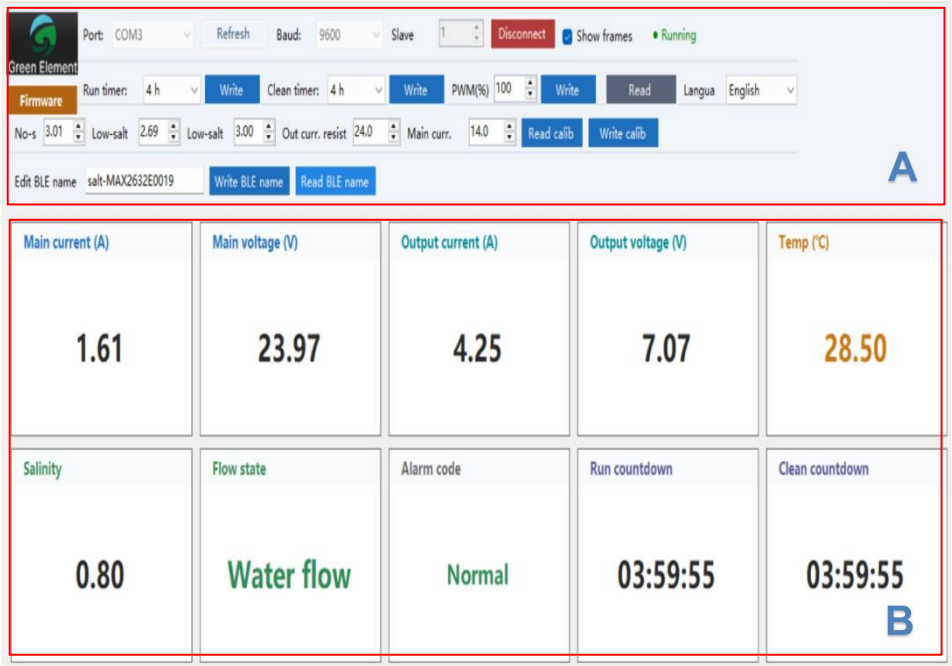

Notes:

- To modify a parameter (e.g., Timer), click the dropdown arrow next to "Run Timer", select a value, and click "Write". The "Run Countdown" in Area B will then start counting down from the selected value.
- Area A has two "Low-salt" options: the left one is the lower limit, the right one is the upper limit. When the salinity falls outside this range, the device triggers fault code E002 (low salt alarm) but continues to operate normally. In this case, add an appropriate amount of salt to the pool.
- When the value exceeds the "No-s" setting, the "Alarm Code" shows "No Salt" and the device stops. Add an appropriate amount of salt to the pool.
- "Temp" displays the current pool water temperature. If it exceeds 10–40 °C, the device stops working.

16.1.6 Device Reset

The device features self-protection. In the event of an internal short circuit, it automatically cuts off power. After the fault is resolved, press the Reset button to resume operation. See figure below.



16.2 Optional Functions

16.2.1 PH Sensor

When a pH sensor is connected, the device automatically detects the pH value. When pH > 7.6, the dosing pump starts; when pH < 7.2, it stops. If no dosing pump is installed, adjust the pH manually.

16.2.2 ORP Sensor

When an ORP sensor is connected, the device automatically detects the ORP value. When ORP > 720, the device stops. When ORP = 700, it operates at 50% output. When ORP < 680, it operates at 100% output.

16.2.3 Dosing Pump

When a dosing pump is connected, the MCU instructs the pump to operate based on the pH value.

Note: Prepare the chemical solution in advance, with the suction tube placed in the solution and the discharge tube placed in the pool.

16.2.4 Pump

Mark 1 is the pump power supply interface. When powered on, the device automatically supplies power to the pump. Supports 100–240 V AC.

Mark 2 is the pump reset button. In the event of an electrical short circuit, power is automatically cut off. After the fault is resolved, press this button to restore power to the pump.



Note: If the pump is not working, the device will also stop working.

16.3 Guide of troubleshooting

Malfunction	Fault code	Fault cause	Treatment method
Digital tube shows error code: E001	E01	No water flow or flow too low	Check for water flow in the electrolysis cell.
The LS light on	E02	Salt below 2500 PPM	Adjust salinity to 4000PPM
	OFF	Salt below 2000 PPM	
Temperature value is flashing on the digital tube	N/A	Water temperature exceeds 40°C	It is recommended to adjust the water temperature to 25°C-28°C
		Water temperature is below 10°C	

17. Touch Screen Series Operation Guide

17.1 Home Page

After startup, the device enters the home page automatically. On other screens, tap this button to return to the home page.



17.2 Basic Parameter Settings

Tap  to enter the basic parameter screen. See figure below.

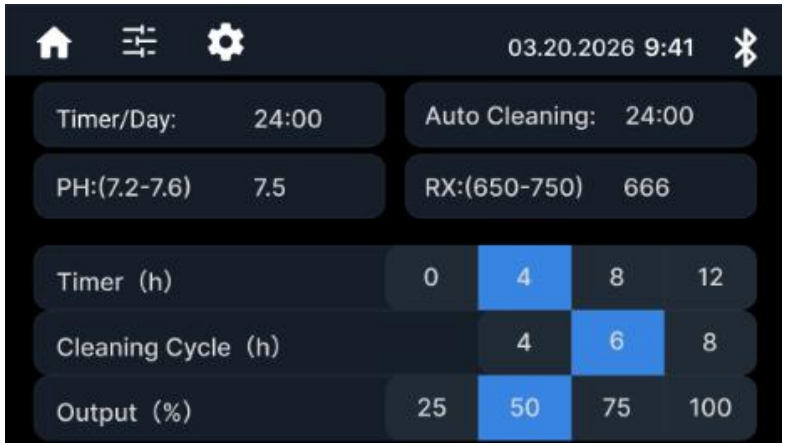

Note:

Functions	Description	Standard / Optional
Timer/Day:24:00	Timer Mode: 24-Hour	Standard
Auto Cleaning:24:00	Auto Clean Mode: 24-Hour	Standard
PH:(7.2-7.6)	7.2–7.6 is the recommended range. Adjust it as needed.	Optional
RX:(650-750)	680–720 is the recommended range. Adjust it as needed.	Optional
Timer(h):0/4/8/12	①Set the device to shut down after a specified number of continuous operating hours. ②0 = Electrolytic cell off	Standard
Cleaning Cycle(h):4/6/8	Set the auto clean interval (hours).	Standard
Output(%):25/50/75/100	Adjust the hourly chlorine output based on water quality and temperature.	Standard

17.3 System Settings

Tap  to enter the system screen. See figure below.

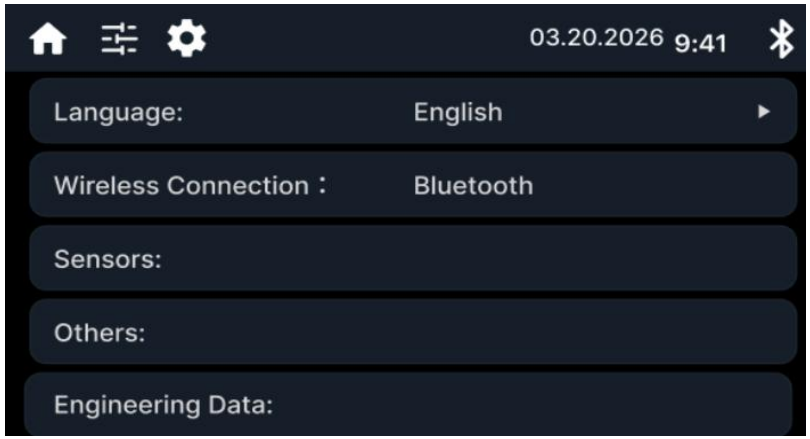

17.3.1 Language

The system default language is English, of course, you may also select another language.

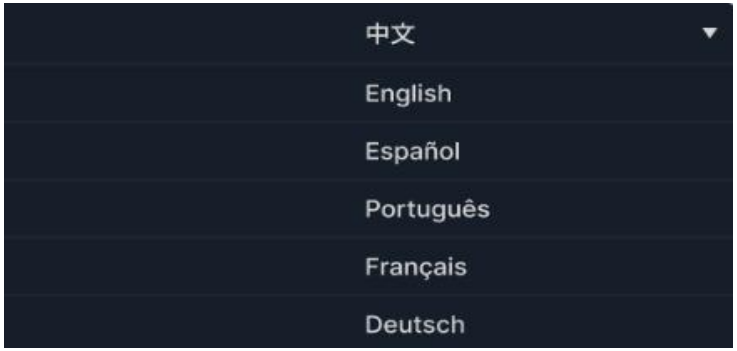

Note: Tap the arrow next to "Language" to select a language.

17.3.2 Wireless Connection

Tap anywhere to the right of “Wireless connection”, then select the communication method between the mobile terminal and the device: either Bluetooth or Wi-Fi.



17.3.3 Sensors

Tap anywhere to the right of "Sensors" to open the submenu with four options: PH, ORP, Flow, Temperature. Tap any option to view its status and adjust parameter settings. See figure below.

Notes:

・Change takes effect after tap OK.

・Numbers shown are for reference only.

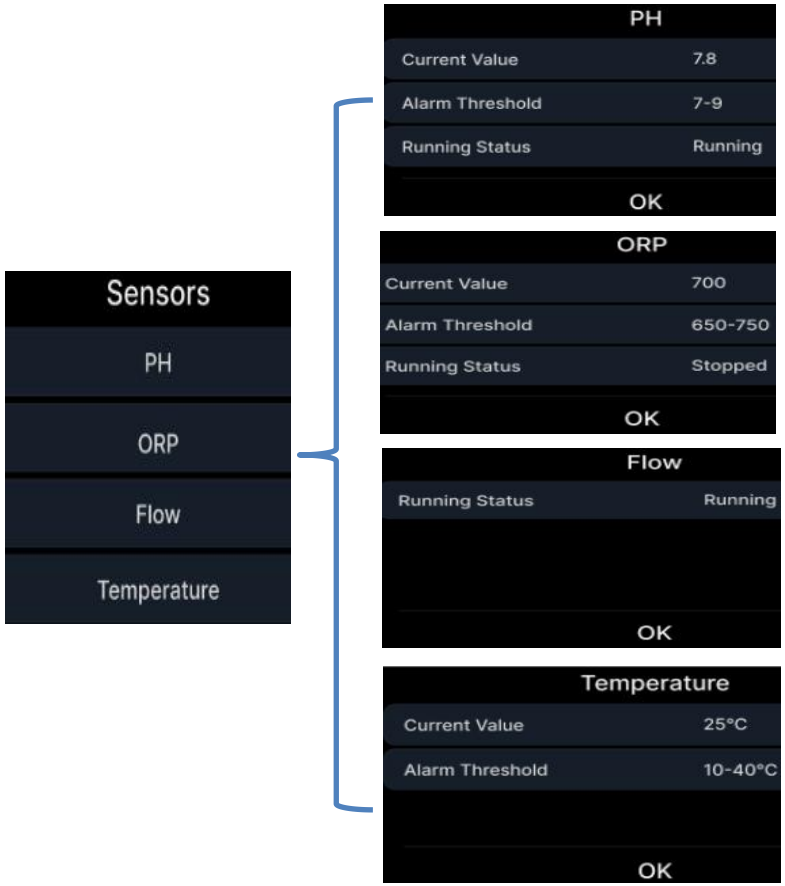

17.3.4 Others(External Relay – Optional)

Tap anywhere to the right of "Others" to display external relay options: Dosing Pump, Pump, Sand Filter, Pool Light. Tap any external relay (e.g., Dosing Pump) to open or close it in the pop-up menu. See figure below.

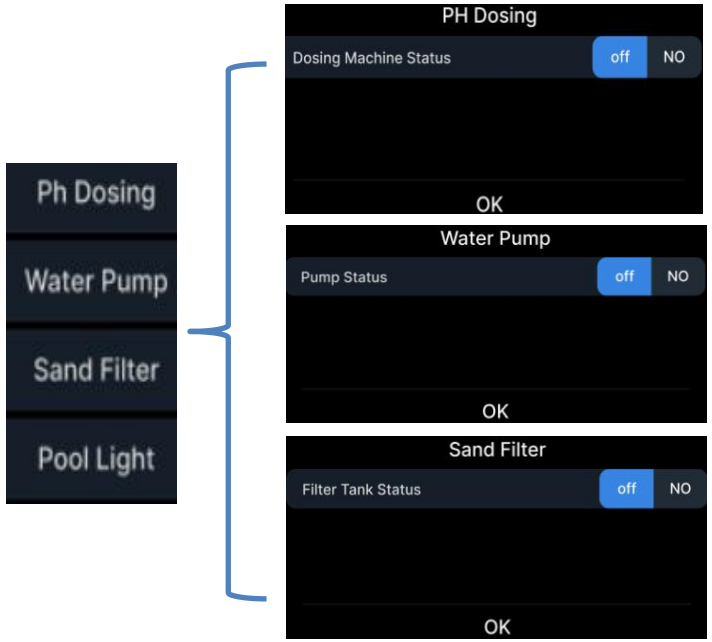

17.3.5 Engineering Mode

Step 1: Tap anywhere to the right of "Engineering Data".

Step 2: Enter the password and tap "OK".



Step 3: Enter Engineering Mode.See figure below.

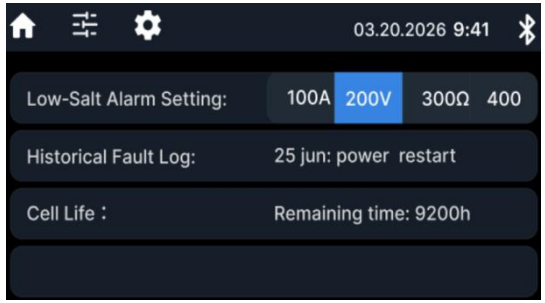

Step 4: Tap any value to the right of "Low-Salt Alarm Setting" to modify the upper and lower limits. See figure below.

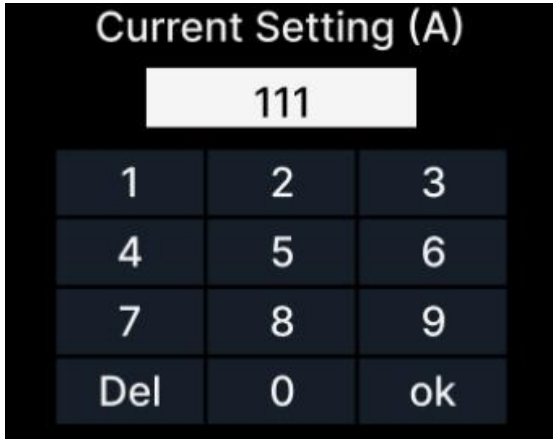

Step 5: Tap the text to the right of "Historical Fault Log" to view the device operation log. see figure below.

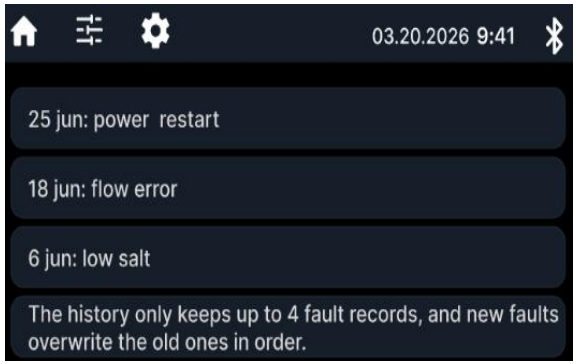

Step 6: Cell Life: Remaining Cell Runtime

Notes:

- Engineering Mode: For technicians only.
- Values shown are for reference only.
- Password provided separately by sales representative.

17.4 Date and time

Displays the current date and time. Tap it to change.



17.5 Wireless communication mode

The current wireless communication method is Bluetooth.



17.6 System Status

Normally, only xx g/hr is displayed here. When a fault occurs, a fault code appears. Refer to Section 16.3 for fault code descriptions. See figure below.



17.7 Water Quality (Optional)

Once the device is connected to pH and ORP sensors, the system will automatically monitor water quality and control the chemical dosing pump. Three water quality statuses are available: Very good, Good, and Bad. See figure below.



17.8 Water Temperature

Displays current pool water temperature. Range: 10–40 °C. Alarm if out of range.



17.8 Timer

This shows the device's continuous runtime today — up to 24 hours maximum. The timer resets once the device loses power.



17.9 Salinity

This displays the current salinity level of the pool water. The recommended salinity is 4,000 ppm. When the salinity drops below 2,500 ppm, the device will report error code E002. When the salinity falls below 2,000 ppm, the electrolytic cell will stop working and display "off."



18. Daily maintenance of generator

Regular maintenance and care will extend the life of the generator and ensure that the swimming pool is maintained at all times.

18.1 Check regularly

Check the generator system regularly for any signs of wear,leakage,or damage.Observe plates and connections for scaling or buildup.

18.2 Cleaning the cell

Scale buildup on the cell can reduce the production of chlorine,please clean the cell regularly.

This usually involves using a diluted acid solution (hydrochloric acid or specific cell cleaning solution) to remove scale deposits.

18.3 Check the salt content

Keep the salt content within the recommended range for your specific generator system.

Test the salt content regularly using a saline test kit and add salt as needed.

18.4 Maintain water chemistry

Ensure proper water chemical balance,including pH,alkalinity and stabilizer(cyanuric acid) levels.

Balanced water chemistry increases the efficiency of the chlorine generator.

18.5 Monitoring output

Pay attention to the chlorine output,please regularly use a professional residual chlorine test tool to test the residual chlorine in the pool,if there is not enough chlorine in the pool, although the salt level is appropriate and the equipment is operating properly,there may be problems with the generator or plate that need to be resolved.

18.6 Winter maintenance

If you live in an area with cold winters,give the generator proper winter treatment to prevent freezing temperature damage.Follow the instructions in "Winter Maintenance" for winter maintenance.

18.7 Professional maintenance

Consider annual maintenance or repair by a pool professional to ensure the generator functions optimously. They can effectively check,clean up and troubleshoot any problems.

19. Winter maintenance

In winter,especially in cold climates,maintaining your devices is essential to prevent damage and make sure it works properly when season returns.

19.1 System cold protection

Properly winterize the generator system before the temperature drops below freezing.Drain equipment and pipes to prevent freezing and potential damage.

19.2 Disconnect and save

Disconnect the generator from the system if possible.Store it indoors in a dry and protected place.This prevents exposure to freezing temperatures and potential damage.

19.3 Check regularly

Check the generator system regularly throughout the winter,especially during heavy snow or extreme weather.Make sure it stays dry and intact.

19.4 Avoid chemicals

In winter,do not add chemicals or salt to the pool,as the generator may be inactive.This prevents any unnecessary build-up or damage to the system.

19.5 Professional Services

Consider scheduling a professional inspection or service before winter sets in.They can properly winterize the system and make sure it is in good condition during the off-season.

19.6 Keep records

Keep records of any winterization measures taken during the winter and any problems noticed for future reference.

19.7 Spring starting plan

When winter is over and you are ready to reopen the pool,it is recommended to restart and re-adjust the generator settings as instructed in the section "Operation Guide".

20. Electrolytic cell cleaning guide

20.1Turn off the power

Before cleaning the electrolytic cell,power off the device.

20.2 Disassemble Generator

a.Remove the power cord and the electrolytic cell cable.

b.Cutting off the water supply through the generator. If you use the bypass installation method recommended in the manual,firstly,opening the "Water Shut-Off Valves"on the main route and closing the "Water Shut-Off Valves" at both ends of the generator.If you don't use bypass installation,you need to turn off the circulating pump.

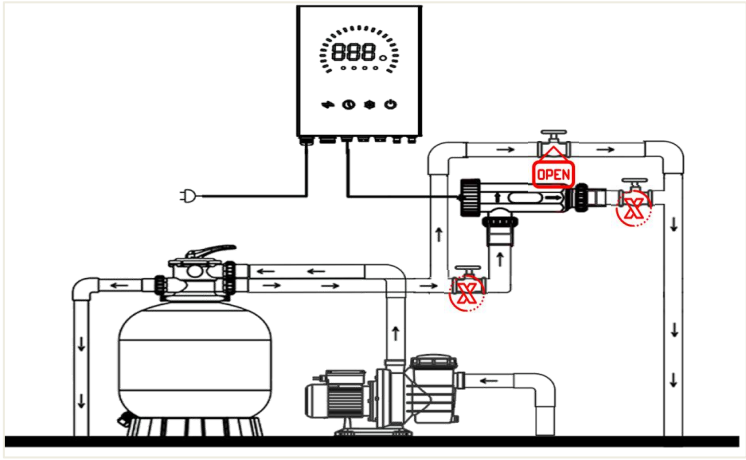

c.Unscrewing the nuts at both ends of the electrolytic cell, taking out the electrolytic cell and ensuring that all the water flows out.

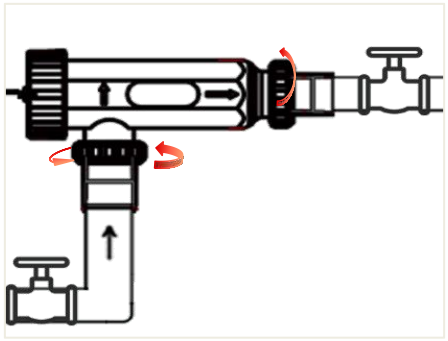

d. Turn the cover counterclockwise to remove the receptacle mount plate.

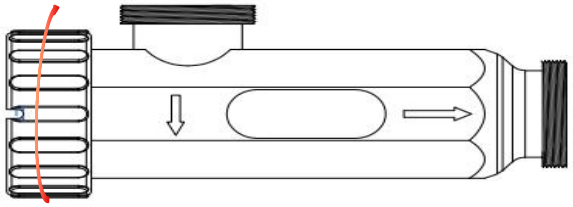

e.Finally take out the titanium plate from the housing.



20.3 Check the accumulation

Check whether there is any water scale,mineral deposits or debris buildup on the cell. The buildup of scale will hinder the production of chlorine and reduce the efficiency of the cell.

20.4 Prepare a cleaning solution

Usually,a diluted hydrochloric acid solution (usually a mixture of water and acid in a specific ratio)is used for cleaning,with hydrochloric acid and water diluted in a ratio of 1:10 or 1:5.

We also recommend adding "Acid Magic" to your solution,which can reduce corrosion,reduce the risk of skin irritation or burns,reduce smoke by 90%,and maintain or improve cleaning results.There is no need to dilute Acid Magic,just add the right amount according to the instructions on the label on the bottle.

Before preparing your cleaning solution,read the product label,manufacturer's instructions,and safety data sheet on the bottle for specific instructions on how to use "Acid Magic"and"Muriatic Acid" together to ensure safety and effectiveness.

20.5 Soaking the cell

Soak the electrode cell in the cleaning solution for between 5 and 15 minutes,but avoid excessive soaking,so as not to affect the material and performance of the electrode cell.This allows the acid solution to dissolve and remove the scale.

20.6 Thorough washing

After soaking or scrubbing,rinse the cell thoroughly with clean water to remove any remaining cleaning solution or debris.

20.7 Installation again

Reinstalling the generator to ensure that there is no water leakage in the connection.

20.8 Restart the system

Turn the power back on and restart the generator system.Monitor the system to ensure it is functioning properly and producing chlorine efficiently.

20.9 Regular maintenance

Regular maintenance and cleaning,which helps prevent excessive scale buildup and maintains the efficiency of the generator.

Follow safety precautions,such as wearing protective gear when handling chemicals,to ensure safe and effective cleaning.