SALT CHLORINATOR



Mini-Salt Chlorinator





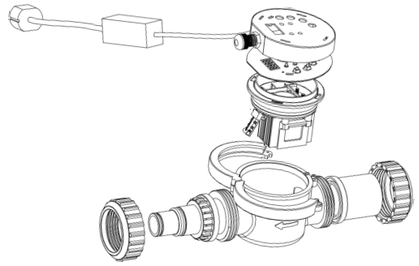

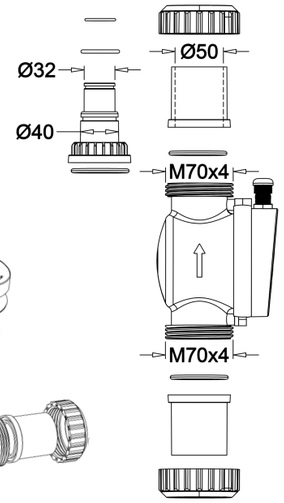

Specifications

1. Simple install, operation, maintenance & replacement
2. Self-cleaning titanium electrolytic cell
3. Adjustable chlorine output
4. Precise salinity detection
5. Flow monitoring & cell damage protection
6. Digital display with LED status indicators
7. High/low salt alert & electrolytic cell protection
8. 2-year warranty for electrolytic cell
9. For SPA & residential swimming pools

Model No.	Input Voltage & Frequency	Recommended Salinity	Chlorine Output	**Pipe Connection Size**	Recommended Pool Volume (m^3)	**Recommended Pool (Gallons)**
GR-SaltMini-2.5	110V-240V / 50-60Hz	3000-4000ppm	2.5g/h	1.25"/32mm 1.5"/40mm 2"/50mm	<10	<2600
GR-SaltMini-5	110V-240V / 50-60Hz	3000-4000ppm	5g/h	1.25"/32mm 1.5"/40mm 2"/50mm	10～18	2600-4700
GR-SaltMini-7.5	110V-240V / 50-60Hz	3000-4000ppm	7.5g/h	1.25"/32mm 1.5"/40mm 2"/50mm	13～27	3400-7100
GR-SaltMini-10	110V-240V / 50-60Hz	3000-4000 ppm	10g/h	1.25"/32mm 1.5"/40mm 2"/50mm	23～45	6100-11000

Installation Diagram

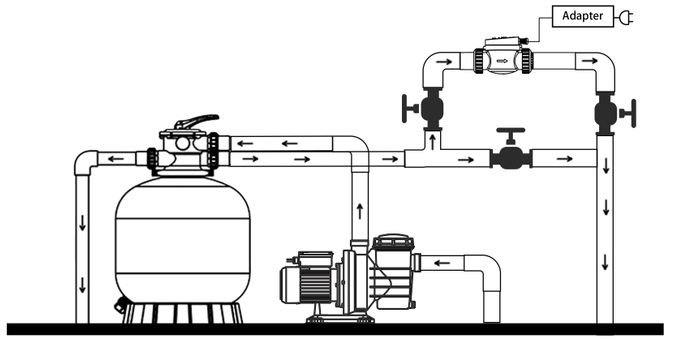

Green Element

Pro-Salt Chlorinator



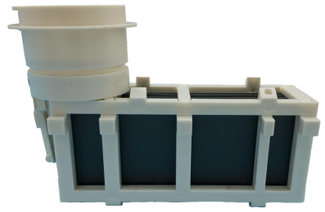

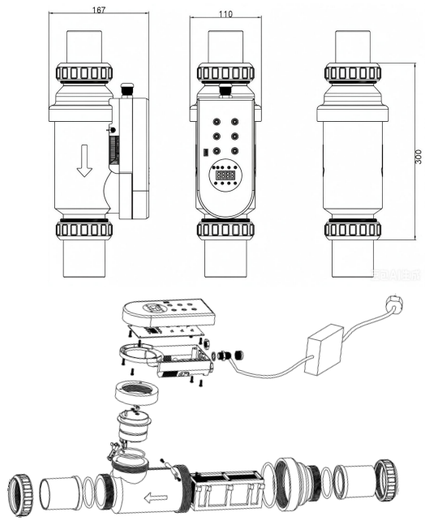

Specifications

1. Simple installation, operation, servicing & replacement
2. Self-cleaning titanium salt cell
3. Adjustable sanitiser output
4. Precise salt concentration sensing
5. Flow switch for flow monitoring & salt cell protection
6. Digital display with LED status indicators
7. High/low salt alarm & salt cell safeguard
8. 2-year warranty on titanium salt cell

Model No.	Input Voltage & Freq.	Recommended Salinity Range	Chlorine Output	Pipe Connection Size	Recommended Pool Volume (m^3)	Recommended Pool (US Gallons)
GR-SaltPro-15g/h	110V-240V / 50-60Hz	3000—4000 ppm	15g/h	2"/50mm or 63mm	65~95	17000-25000
GR-SaltPro-20g/h	110V-240V / 50-60Hz	3000—4000 ppm	20g/h	2"/50mm or 63mm	90～120	23000-31000
GR-SaltPro-25g/h	110V-240V / 50-60Hz	3000—4000 ppm	25g/h	2"/50mm or 63mm	105～140	27000-36000
GR-SaltPro-30g/h	110V-240V / 50-60Hz	3000—4000 ppm	30g/h	2"/50mm or 63mm	120～160	31000-42000
GR-SaltPro-35g/h	110V-240V / 50-60Hz	3000—4000 ppm	35g/h	2"/50mm or 63mm	135～180	36000-47000

Installation Diagram

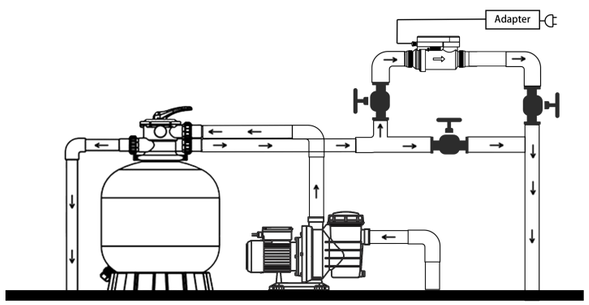

Max-Salt Chlorinator



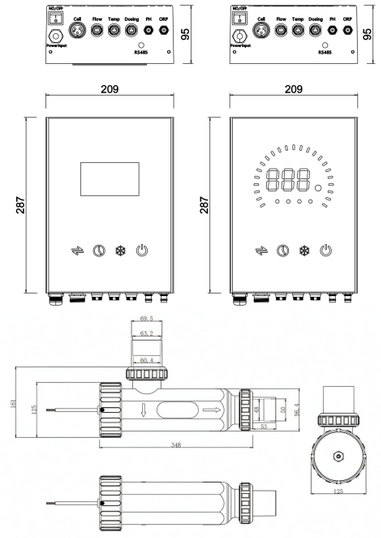

Specifications

1. Customisable for customer system integration
2. Simple installation, operation, servicing & replacement
3. Self-cleaning titanium electrolytic cell
4. Adjustable chlorine generation output
5. Real-time salinity monitoring, auto chlorine on/off
6. Detachable flow & temp sensors, field-replaceable
7. Digital display with LED status indicators
8. High/low salinity alarm with electrolytic cell protection
9. 2-year factory warranty on electrolytic cell

Model No.	Input Voltage & Freq.	Recommended Salinity	Chlorine Output	Pipe Connection Sizes	Recommended Pool Volume (m^3)	Recommended Pool (US Gallons)
GR-SaltMax-15g/h	110V-240V / 50-60Hz	3000-4000ppm	15g/h	2"/50mm or 63mm	65～95	17000-25000
GR-SaltMax-20g/h	110V-240V / 50-60Hz	3000-4000ppm	20g/h	2"/50mm or 63mm	90～120	23000-31000
GR-SaltMax-25g/h	110V-240V / 50-60Hz	3000-4000ppm	25g/h	2"/50mm or 63mm	105～140	27000-36000
GR-SaltMax-30g/h	110V-240V / 50-60Hz	3000-4000ppm	30g/h	2"/50mm or 63mm	120～160	31000-42000
GR-SaltMax-35g/h	110V-240V / 50-60Hz	3000-4000 ppm	35g/h	2"/50mm or 63mm	135～180	36000-47000
GR-SaltMax-40g/h	110V-240V / 50-60Hz	3000-4000ppm	40g/h	2"/50mm or 63mm	150～200	39000-53000
GR-SaltMax-45g/h	110V-240V / 50-60Hz	3000-4000ppm	45g/h	2"/50mm or 63mm	165～220	43000-58000
GR-SaltMax-50g/h	110V-240V / 50-60Hz	3000-4000ppm	50g/h	2"/50mm or 63mm	180~240	47000-63000

Installation Diagram

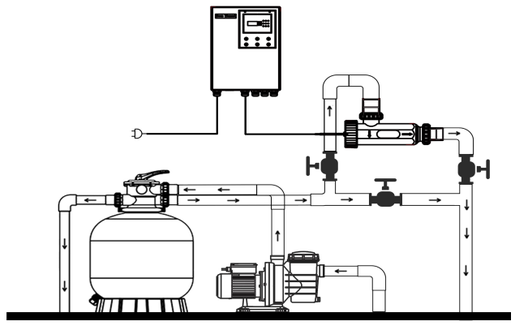

Green Element