

SHENZHEN GREEN ELEMENT POOL EQUIPMENT CO.,LTD

Room 102, Building 38, Dayun Software Town
Longgang District, Shenzhen City, Guangdong, China

sales@grelements.com

0086-755-29482968

www.piscinaled.com

SCAN TO VISIT
OUR WEBSITE

GREEN ELEMENT

GREEN ELEMENT

Smart Pool Water Treatment
Equipment



@2026

Company Profile

Founded in 2008, Shenzhen Green Element Pool Equipment Co., Ltd. is a vertically integrated OEM/ODM manufacturer of high-performance LED pool lights and salt chlorinators.
More than a supplier—we engineer reliable, tailored solutions that help distributors, pool builders, and service contractors scale their businesses with confidence.

Why Pool Professionals Choose Green Element?

In-House R&D
Every core component is researched, developed, and manufactured in-house—ensuring long-lasting performance and a real engineering edge.

Vertical Integration
From industrial design and tooling to production and global shipping, every step is managed in-house for consistent quality and on-time delivery.

ISO-Certified Quality
Strict quality control from raw-material inspection through to finished goods—audited and certified to ISO 9001.

Flexible OEM & ODM
Custom branding, tooling, packaging, and product configurations with short lead times, designed to fit your

Trusted by 300+ distributors and contractors across 50+ countries, Green Element is your long-term partner for smarter, energy-efficient pool systems.



GREEN ELEMENT

CONTENTS

TABLE OF CONTENTS


Salt Chlorinator 1-3


Nicheless Vinyl Liner LED Pool Light 4-8


Fiberglass LED Pool Light 9-11


PAR56 LED Pool Light 12-18


8mm Slim LED Pool Light 19-25


LED Underwater Fountain Light 26-27


Swimming Pool Sand Filter 28-30


IP68 Silicone LED Pool Strip Light 31


Swimming Pool Water Pump 32-33


Pool Cleaning Equipment 34-38


Power Supply&Controller 39



INNOVATION DRIVES EXCELLENCE

Reliable, energy-efficient pool equipment — engineered for the global market.

Factory Direct

Prompt Response

Certified Products

Tailored Solutions

SALT CHLORINATOR



Mini-Salt Chlorinator





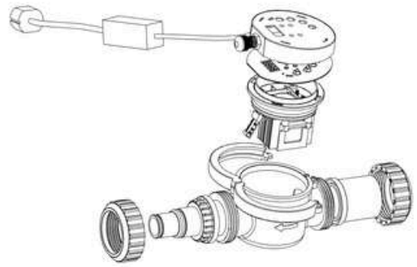

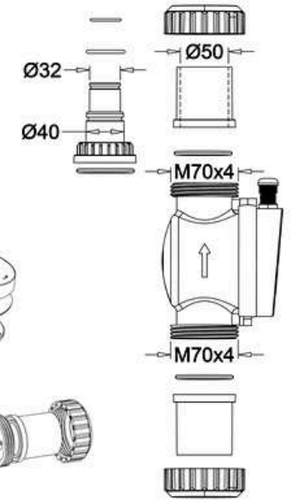

Specifications

1. Simple install, operation, maintenance & replacement
2. Self-cleaning titanium electrolytic cell
3. Adjustable chlorine output
4. Precise salinity detection
5. Flow monitoring & cell damage protection
6. Digital display with LED status indicators
7. High/low salt alert & electrolytic cell protection
8. 2-year warranty for electrolytic cell
9. For SPA & residential swimming pools

Model No.	Input Voltage & Frequency	Recommended Salinity	Chlorine Output	**Pipe Connection Size**	Recommended Pool Volume (m^3)	**Recommended Pool (Gallons)**
GR-SaltMini-2.5	110V-240V / 50-60Hz	3000-4000ppm	2.5g/h	1.25"/32mm 1.5"/40mm 2"/50mm	<10	<2600
GR-SaltMini-5	110V-240V / 50-60Hz	3000-4000ppm	5g/h	1.25"/32mm 1.5"/40mm 2"/50mm	10～18	2600-4700
GR-SaltMini-7.5	110V-240V / 50-60Hz	3000-4000ppm	7.5g/h	1.25"/32mm 1.5"/40mm 2"/50mm	13～27	3400-7100
GR-SaltMini-10	110V-240V / 50-60Hz	3000-4000 ppm	10g/h	1.25"/32mm 1.5"/40mm 2"/50mm	23～45	6100-11000

Installation Diagram

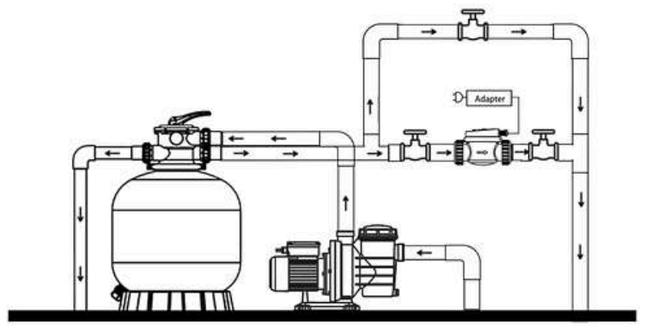

Green Element

Pro-Salt Chlorinator





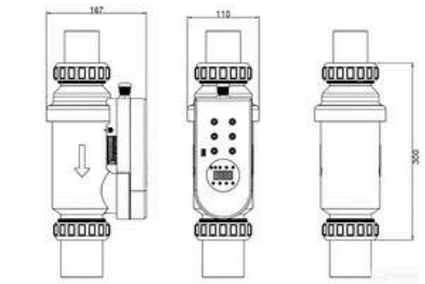

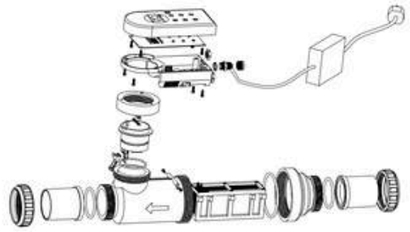

Specifications

1. Simple installation, operation, servicing & replacement
2. Self-cleaning titanium salt cell
3. Adjustable sanitiser output
4. Precise salt concentration sensing
5. Flow switch for flow monitoring & salt cell protection
6. Digital display with LED status indicators
7. High/low salt alarm & salt cell safeguard
8. 2-year warranty on titanium salt cell

Model No.	Input Voltage & Freq.	Recommended Salinity Range	Chlorine Output	Pipe Connection Size	Recommended Pool Volume (m^3)	Recommended Pool (US Gallons)
GR-SaltPro-15g/h	110V-240V / 50-60Hz	3000—4000 ppm	15g/h	2"/50mm or 63mm	65~95	17000-25000
GR-SaltPro-20g/h	110V-240V / 50-60Hz	3000—4000 ppm	20g/h	2"/50mm or 63mm	90～120	23000-31000
GR-SaltPro-25g/h	110V-240V / 50-60Hz	3000—4000 ppm	25g/h	2"/50mm or 63mm	105～140	27000-36000
GR-SaltPro-30g/h	110V-240V / 50-60Hz	3000—4000 ppm	30g/h	2"/50mm or 63mm	120～160	31000-42000
GR-SaltPro-35g/h	110V-240V / 50-60Hz	3000—4000 ppm	35g/h	2"/50mm or 63mm	135～180	36000-47000

Installation Diagram

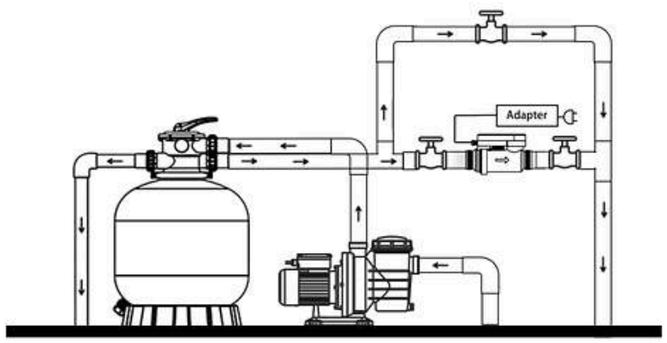

Max-Salt Chlorinator





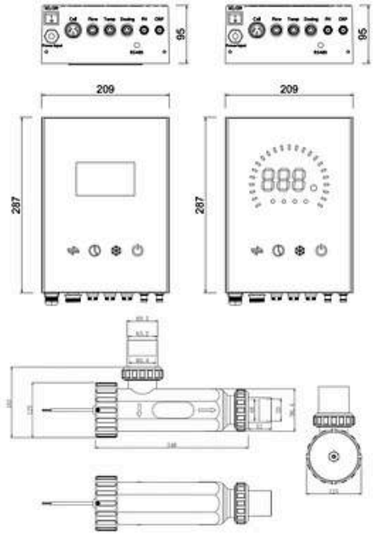

Specifications

1. Customisable for customer system integration
2. Simple installation, operation, servicing & replacement
3. Self-cleaning titanium electrolytic cell
4. Adjustable chlorine generation output
5. Real-time salinity monitoring, auto chlorine on/off
6. Detachable flow & temp sensors, field-replaceable
7. Digital display with LED status indicators
8. High/low salinity alarm with electrolytic cell protection
9. 2-year factory warranty on electrolytic cell

Model No.	Input Voltage & Freq.	Recommended Salinity	Chlorine Output	Pipe Connection Sizes	Recommended Pool Volume (m^3)	Recommended Pool (US Gallons)
GR-SaltMax-15g/h	110V-240V / 50-60Hz	3000-4000ppm	15g/h	2"/50mm or 63mm	65～95	17000-25000
GR-SaltMax-20g/h	110V-240V / 50-60Hz	3000-4000ppm	20g/h	2"/50mm or 63mm	90～120	23000-31000
GR-SaltMax-25g/h	110V-240V / 50-60Hz	3000-4000ppm	25g/h	2"/50mm or 63mm	105～140	27000-36000
GR-SaltMax-30g/h	110V-240V / 50-60Hz	3000-4000ppm	30g/h	2"/50mm or 63mm	120～160	31000-42000
GR-SaltMax-35g/h	110V-240V / 50-60Hz	3000-4000 ppm	35g/h	2"/50mm or 63mm	135～180	36000-47000
GR-SaltMax-40g/h	110V-240V / 50-60Hz	3000-4000ppm	40g/h	2"/50mm or 63mm	150～200	39000-53000
GR-SaltMax-45g/h	110V-240V / 50-60Hz	3000-4000ppm	45g/h	2"/50mm or 63mm	165～220	43000-58000
GR-SaltMax-50g/h	110V-240V / 50-60Hz	3000-4000ppm	50g/h	2"/50mm or 63mm	180~240	47000-63000

Installation Diagram

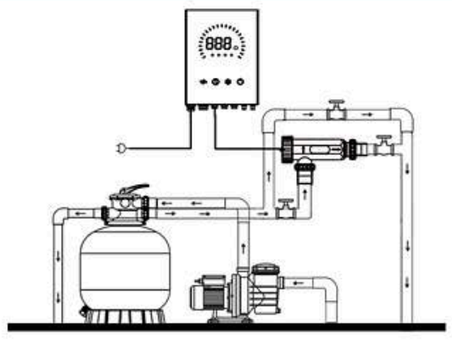

Green Element

Nicheless Pool Light





1.5" Nicheless Vinyl Liner LED Pool Light Model-A



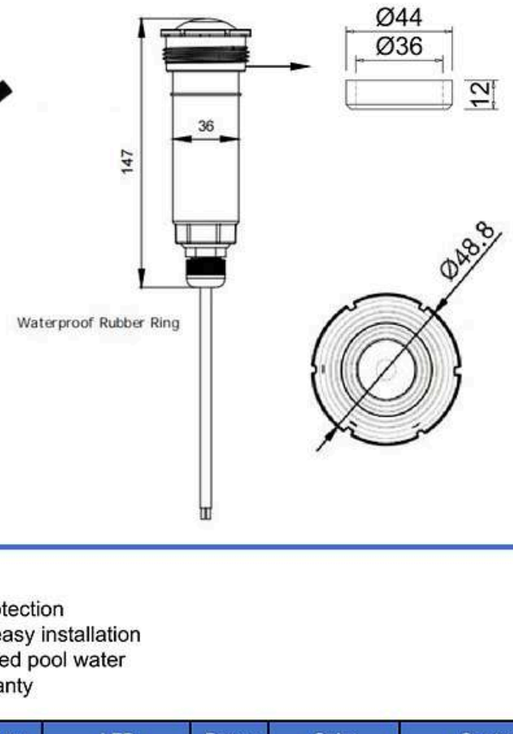

Specifications

- IP68 waterproof and CE & RoHS certified
- Built-in heat dissipation, overheat and overload protection
- Compatible with standard 1.5" pool light niche for easy installation
- Anti-corrosion casing suitable for salt and chlorinated pool water
- 50,000-hour LED lifespan, covered by 2-year warranty

Model No.	Dimension	Material	Voltage	LED	Power	Color	Control
GR-1.5"NL9W-A	Φ50*147mm	ABS+ Resin Filled	AC/DC 12V	SMD3535*6pcs	9W	RGB/ RGBW/ Single Color	Switch / App/Remote / WiFi /DMX512
GR-1.5"NL12W-A	Φ50*147mm	ABS+ Resin Filled	AC/DC 12V	SMD3535*6pcs	12W	RGB/RGBW/ Single Color	Switch / App/Remote / WiFi /DMX512
GR-1.5"NL15W-A	Φ50*147mm	ABS+ Resin Filled	AC/DC 12V	SMD3535*6pcs	15W	RGB/RGBW/ Single Color	Switch / App/Remote / WiFi /DMX512
GR-1.5"NL18W-A	Φ50*147mm	ABS+Resin Filled	AC/DC 12V	SMD3535*6pcs	18W	RGB/RGBW/ Single Color	Switch / App/Remote / WiFi /DMX512

Installation Diagram

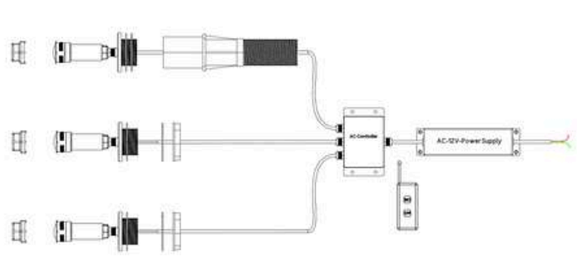

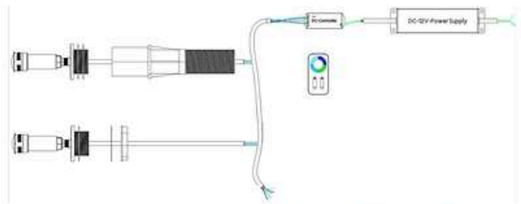



1.5" Nicheless Vinyl Liner LED Pool Light Model-B

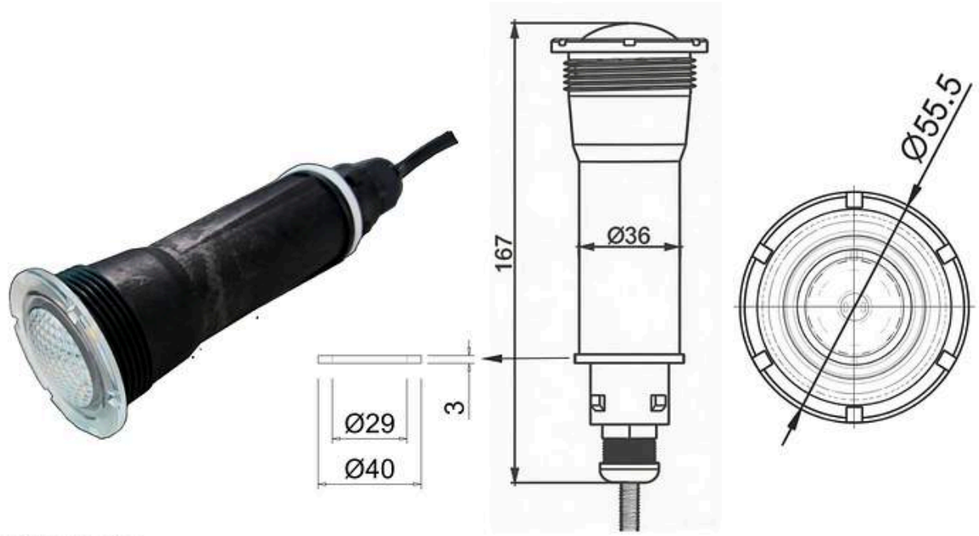

Specifications

- Fits 1.5" standard embedded holes
- IP68 waterproof, CE & RoHS certified
- Integrated heat sink with overheat protection
- Anti-corrosion for salt & chlorinated pool water
- Direct replacement for Pentair GloBrite® series

Model No.	Dimension	Material	Voltage	LED	Power	Color	Control
GR-1.5"NL9W-B	Φ55.5*167mm	ABS+Resin Filled	AC/DC 12V	SMD3535*6pcs	9W	RGB/RGBW/ Single Color	Switch / App/Remote / WiFi /DMX512
GR-1.5"NL12W-B	Φ55.5*167mm	ABS+Resin Filled	AC/DC 12V	SMD3535*6pcs	12W	RGB/RGBW/ Single Color	Switch / App/Remote / WiFi /DMX512
GR-1.5"NL15W-B	Φ55.5*167mm	ABS+Resin Filled	AC/DC 12V	SMD3535*6pcs	15W	RGB/RGBW/ Single Color	Switch / App/Remote / WiFi /DMX512
GR-1.5"NL18W-B	Φ55.5*167mm	ABS+Resin Filled	AC/DC 12V	SMD3535*6pcs	18W	RGB/RGBW/ Single Color	Switch / App/Remote / WiFi /DMX512

Installation Diagram

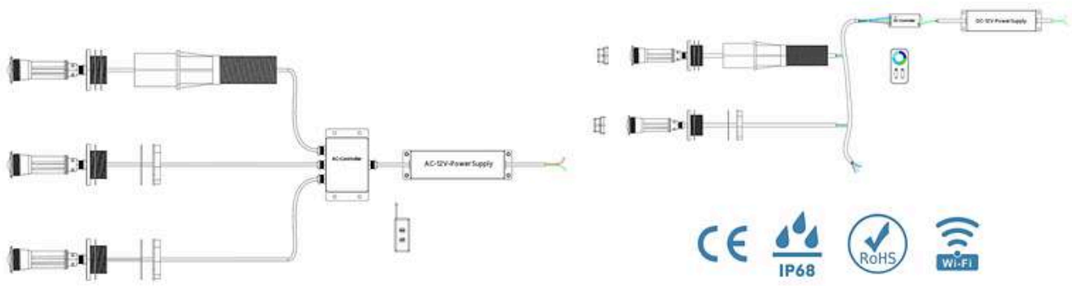

1.5" Nicheless Vinyl Liner LED Pool Light Model-C

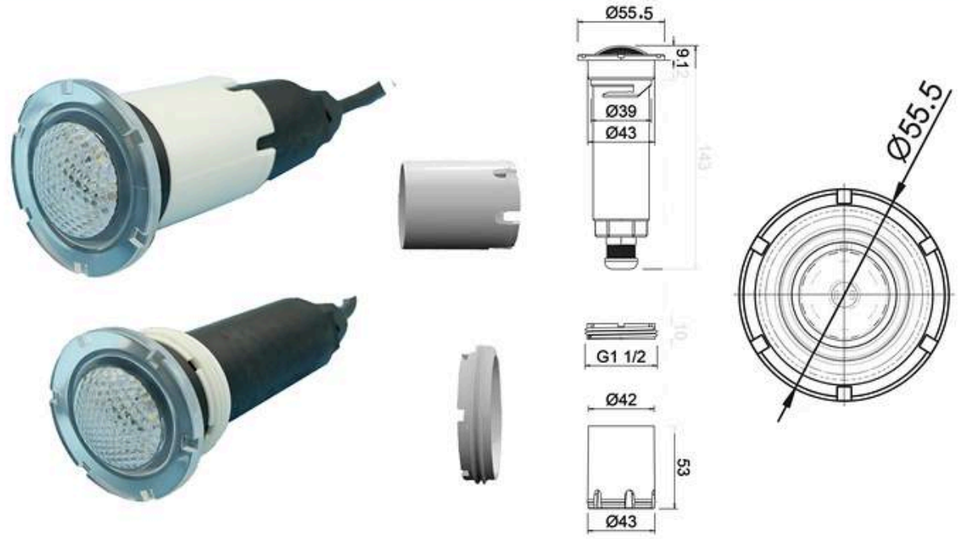

Specifications

- Certifications: IP68 waterproof, CE & RoHS certified
- Integrated heat dissipation with overheat & overload protection
- Fits 1.5" standard niche for quick setup
- Corrosion-resistant housing for salt & chlorinated pools
- Supplied with 2 sets of fittings for multiple mounting ways
- 50,000-hour LED lifespan, 2-year warranty

Model No.	Dimension	Material	Voltage	LED	Power	Color	Control
GR-1.5"NL9W-C	Φ55.5*145mm	ABS+Resin Filled	AC/DC 12V	SMD3535*6pcs	9W	RGB/RGBW/ Single Color	Switch / App/Remote / WiFi /DMX512
GR-1.5"NL12W-C	Φ55.5*145mm	ABS+Resin Filled	AC/DC 12V	SMD3535*6pcs	12W	RGB/RGBW/ Single Color	Switch / App/Remote / WiFi /DMX512
GR-1.5"NL15W-C	Φ55.5*145mm	ABS+Resin Filled	AC/DC 12V	SMD3535*6pcs	15W	RGB/RGBW/ Single Color	Switch / App/Remote / WiFi /DMX512
GR-1.5"NL18W-C	Φ55.5*145mm	ABS+Resin Filled	AC/DC 12V	SMD3535*6pcs	18W	RGB/RGBW/ Single Color	Switch / App/Remote / WiFi /DMX512

Installation Diagram

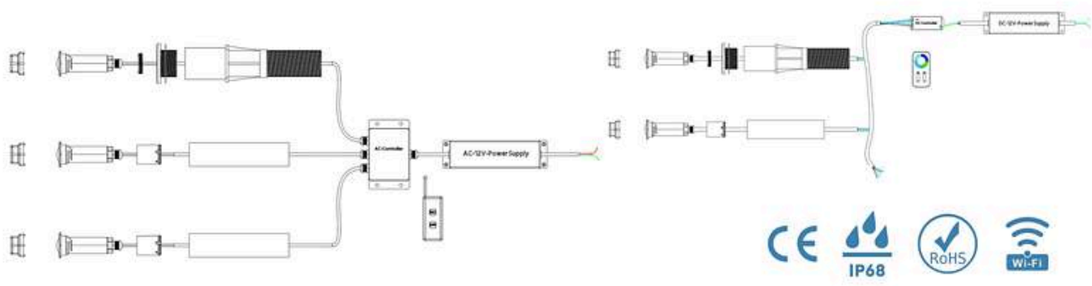

Green Element

1.5" Nicheless Vinyl Liner LED Pool Light Model-D

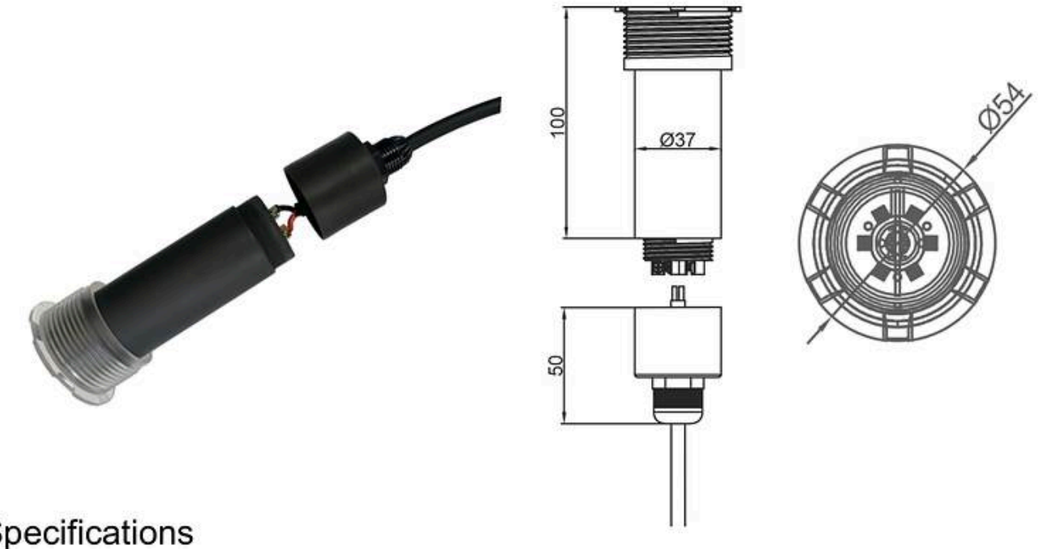

Specifications

- IP68 waterproof, CE & RoHS certified
- Heat dissipation with overtemperature & overload protection
- Fits 1.5" pool light niche for quick installation
- Anti-corrosion housing for chlorine and saltwater pools
- Split design for easy lamp replacement, no pool damage or rewiring
- 50,000-hour LED lifespan, 2-year warranty

Model No.	Dimension	Material	Voltage	LED	Power	Color	Control
GR-1.5"NL9W-D	Φ54*150mm	ABS+Resin Filled	AC/DC 12V	SMD3535*6pcs	9W	RGB/ RGBW/ Single Color	Switch / Remote / WiFi / DMX512
GR-1.5"NL12W-D	Φ54*150mm	ABS+Resin Filled	AC/DC 12V	SMD3535*6pcs	12W	RGB/ RGBW/ Single Color	Switch / Remote / WiFi / DMX512
GR-1.5"NL15W-D	Φ54*150mm	ABS+Resin Filled	AC/DC 12V	SMD3535*6pcs	15W	RGB/ RGBW/ Single Color	Switch / Remote / WiFi / DMX512
GR-1.5"NL18W-D	Φ54*150mm	ABS+Resin Filled	AC/DC 12V	SMD3535*6pcs	18W	RGB/ RGBW/ Single Color	Switch / Remote / WiFi / DMX512

Installation Diagram

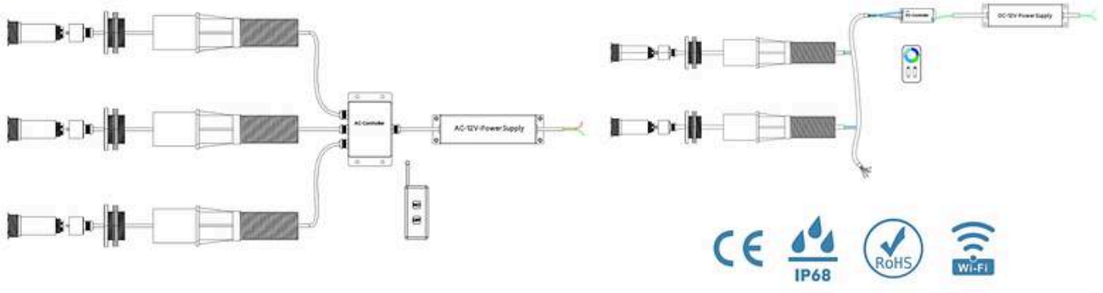

1.5" Nicheless Vinyl Liner LED Pool Light Model-E

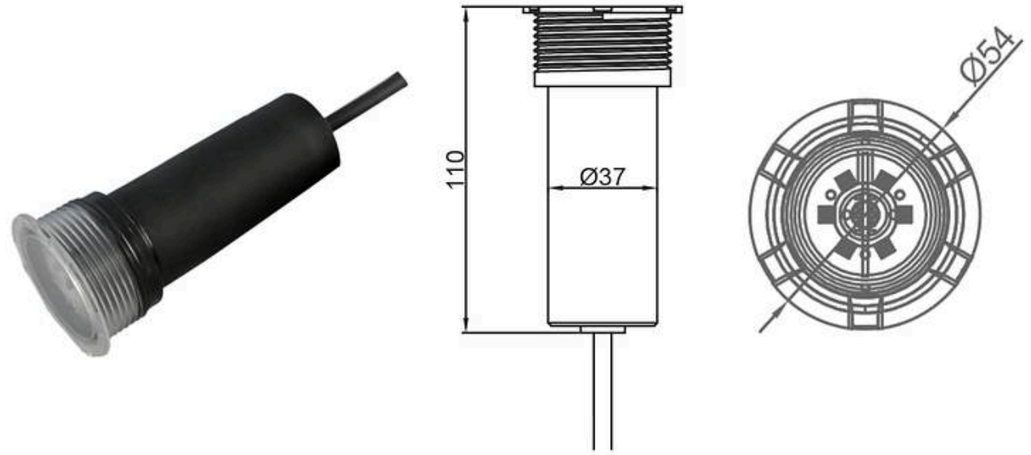

Specifications

- IP68 waterproof, CE & RoHS certified
- Integrated heat dissipation and thermal overload protection
- Compatible with standard 1.5” pool light niche for rapid fitting
- Corrosion-resistant housing for chlorine and salt water applications
- Direct hole mount for liner pools, niche-free, no liner destruction
- 50,000-hour LED lifespan, 2-year warranty

Model No.	Dimension	Material	Voltage	LED	Power	Color	Control
GR-1.5"NL9W-E	Φ54*110mm	ABS+Resin Filled	AC/DC 12V	SMD3535*6pcs	9W	RGB/RGBW/ Single Color	Switch/Remote /WiFi/DMX512
GR-1.5"NL12W-E	Φ54*110mm	ABS+Resin Filled	AC/DC 12V	SMD3535*6pcs	12W	RGB/RGBW/ Single Color	Switch/Remote /WiFi/DMX512
GR-1.5"NL15W-E	Φ54*110mm	ABS+Resin Filled	AC/DC 12V	SMD3535*6pcs	15W	RGB/RGBW/ Single Color	Switch/Remote /WiFi/DMX512
GR-1.5"NL18W-E	Φ54*110mm	ABS+Resin Filled	AC/DC 12V	SMD3535*6pcs	18W	RGB/RGBW/ Single Color	Switch/Remote /WiFi/DMX512

Installation Diagram

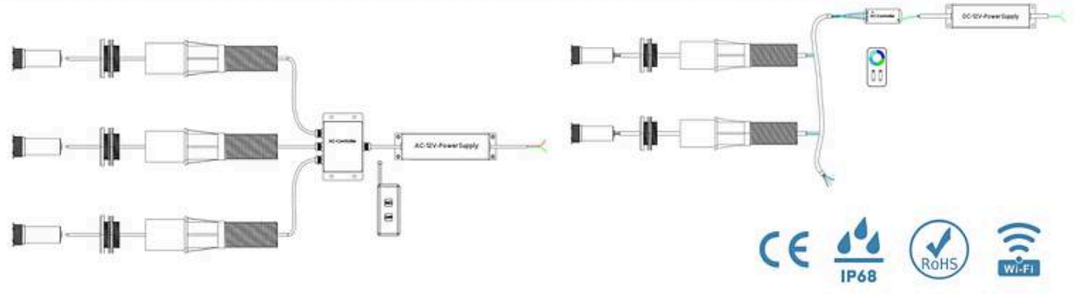

Green Element



1.5" Fiberglass LED Pool Light

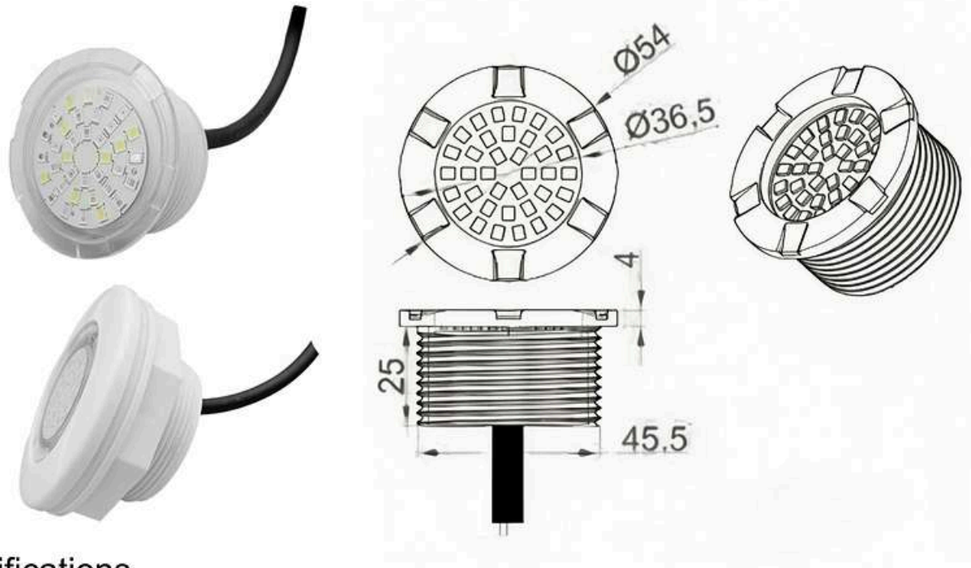

Specifications

- 1.5" standard thread mount, flush installation on fiberglass pools
- IP68 full resin potting, durable waterproof & anti-fog
- Corrosion-resistant composite shell, anti-yellowing & anti-cracking
- Direct retrofit with no pipe alteration, lower installation workload
- Auto color synchronization for uniform multi-light lighting
- AC12V/DC12V dual low voltage, enhanced underwater safety
- 50,000-hour lifespan, 2-year warranty

Model No.	Dimension	Material	Voltage	LED	Power	Color	Control
GR-1.5FG-2W	Φ54* 25mm	ABS+ Resin Filled	AC/DC 12V	SMD2835*38pcs	2W	RGB / RGBW / Single Color	Switch / App/Remote / WiFi /DMX512

Installation Diagram





1.5" Fiberglass LED Pool Light



Specifications

- IP68 full resin potting waterproof
- Straight-through design for fast fiberglass pool installation & lower labor cost
- AC12V/DC12V dual low voltage, leak-proof and globally safety compliant
- Single/RGB/RGBW lighting with automatic multi-light sync
- Supports Switch / Remote / DMX512 / WiFi four control modes
- 1.5" standard thread, easy screw-in installation
- 50,000-hour lifespan, 2-year warranty

Model No.	Dimension	Material	Voltage	LED	Power	Color	Control
GR-1.5FG-10W	Φ120*40mm	AC12V / DC12V	ABS+ Resin Filled	SMD2835*72pcs	10W	RGB / RGBW / Single Color	Switch / App/Remote / WiFi /DMX512

Installation Diagram

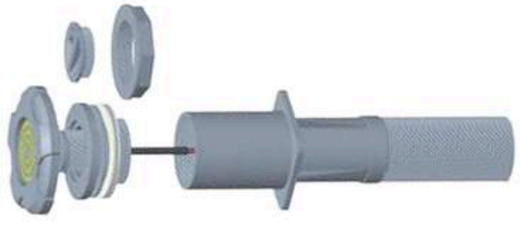



1.5" Fiberglass LED Pool Light



Specifications

- Full resin potting IP68 waterproof,CE & RoHS certified
- 25/35/45W multi-power optional, 12V AC/DC safe low voltage
- Resin-filled shell anti-chlorine, anti-salt and anti-chemical erosion
- Automatic synchronous effect when multiple lights work together
- Four control solutions: Switch / Remote / DMX512 / WiFi
- 50,000-hour lifespan, 2-year warranty

Model No.	Dimension	Material	Voltage	LED	Power	Color	Control
GR-1.5FG-25W	Φ216*20mm	ABS+ Resin Filled	AC12V / DC12V	SMD2835* 324pcs	25W	RGB / RGBW / Single Color	Switch / App/Remote / WiFi /DMX512
GR-1.5FG-35W	Φ216*20mm	ABS+ Resin Filled	AC12V / DC12V	SMD2835* 441pcs	35W	RGB / RGBW / Single Color	Switch / App/Remote / WiFi /DMX512
GR-1.5FG-45W	Φ216*20mm	ABS+ Resin Filled	AC12V / DC12V	SMD2835* 540pcs	45W	RGB / RGBW / Single Color	Switch / App/Remote / WiFi /DMX512

Installation Diagram

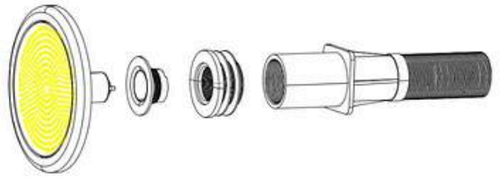



Green Element

Par56 LED Pool Light

PAR56 LED Pool Bulb



Specifications

- IP68 fully resin filled with transparent PC cover, anti-fog and anti-corrosion against chlorine & saltwater
- Standard PAR56 dimension, direct replacement for 95% traditional pool halogen lamps
- Fit original embedded niches and various same dimension fram, easy renovation for aged pools
- Built-in thermal sensor for auto-reduce the lightness overheat protection
- 50,000-hour LED life & 2-year full lamp warranty
- Meets export standards with CE/RoHS certified

Model No.	Dimension	Material	Voltage	LED	Power	Color	Control
GR-PAR56B-25W	Φ177mm*30mm	ABS+ Resin Filled	AC/DC 12V	SMD2835*336pcs	25W	RGB / RGBW / Single Color	Switch / App/Remote / WiFi /DMX512
GR-PAR56B-35W	Φ177mm*30mm	ABS+ Resin Filled	AC/DC 12V	SMD2835*441pcs	35W	RGB / RGBW / Single Color	Switch / App/Remote / WiFi /DMX512
GR-PAR56B-45W	Φ177mm*30mm	ABS+ Resin Filled	AC/DC 12V	SMD2835*540pcs	45W	RGB / RGBW / Single Color	Switch / App/Remote / WiFi /DMX512



Auto-Power Eyeball LED Pool Light









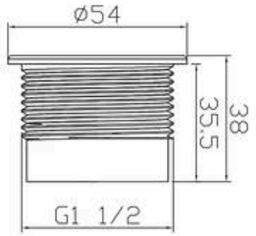

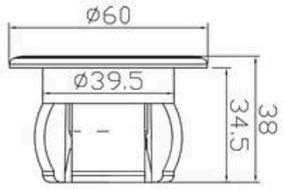

Specifications

- Hydro self-power via inlet water flow, no external power supply or wiring required
- Dual installation: 1.5" thread screw-in or direct push-fit for 2-inch pipes
- Single SMD3535 LED, multi-color optional
- IP68 waterproof resin+ABS casing, anti-chlorine & anti-chemical corrosion
- Adjustable eyeball angle to flexibly change lighting direction
- Meet EU export standards,CE/RoHS certified
- 30,000-hour lifespan, 1 year warranty

Model No.	Dimension	Material	Voltage	LED	Power	Color	Control
GR-AP-1W	Φ35*21mm	ABS+Resin Filled	DC5V (Hydro Auto-power)	SMD3535*1pc	1W	RGB / RGBW / Single Color	Auto-Martic

Installation Diagram





2” PAR56 Fiberglass LED pool light







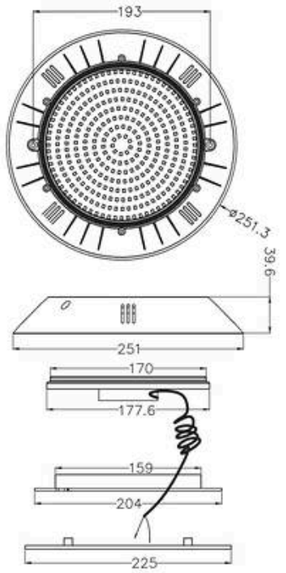

Specifications

- IP68 fully resin filled with transparent PC cover, anti-fog and anti-corrosion against chlorine & saltwater
- Standard PAR56 dimension, direct replacement for 95% traditional pool halogen lamps
- Fit original embedded niches and various same dimension fram, easy renovation for aged pools
- Built-in thermal sensor for auto-reduce the lightness overheat protection
- 50,000-hour LED life & 2-year full lamp warranty
- Meets export standards with CE/RoHS certified

Model No.	Dimension	Material	Voltage	LED	Power	Color	Control
GR-PAR56C-25W	Φ250mm*60mm	ABS+ Resin Filled	AC/DC 12V	SMD2835* 324pcs	25W	RGB / RGBW / Single Color	Switch / App/Remote / WiFi /DMX512
GR-PAR56C-35W	Φ250mm*60mm	ABS+ Resin Filled	AC/DC 12V	SMD2835* 441pcs	35W	RGB / RGBW / Single Color	Switch / App/Remote / WiFi /DMX512
GR-PAR56C-45W	Φ250mm*60mm	ABS+ Resin Filled	AC/DC 12V	SMD2835* 540pcs	45W	RGB / RGBW / Single Color	Switch / App/Remote / WiFi /DMX512

Installation Diagram

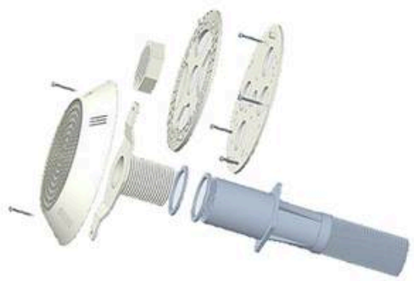



Green Element

Surface-mounted LED Pool Light



Specifications

- IP68 epoxy sealing, anti-fog, anti-condensation & chemical resistance
- ABS casing, fits PAR56 niches or direct wall mounting
- Standard PAR56 size, replaces 95% conventional halogen pool lights
- Built-in thermal protection against overheating damage
- Multi-color modes with multi-lamp sync, no extra adapters needed
- AC12V/DC12V low voltage, meets international pool safety standards
- Four control modes for household and commercial use
- CE & RoHS certified, 2-year full warranty

Model No.	Dimension	Material	Voltage	LED	Power	Color	Control
GR-PAR56-250-25W	Φ250*40mm	ABS+ Resin Filled	AC/DC 12V	SMD2835*336pcs	25W	RGB/RGBW/ Single Color	Switch / App/Remote / WiFi /DMX512
GR-PAR56-250-35W	Φ250*40mm	ABS+ Resin Filled	AC/DC 12V	SMD2835*441pcs	35W	RGB/RGBW/ Single Color	Switch / App/Remote / WiFi /DMX512
GR-PAR56-250-45W	Φ250*40mm	ABS+ Resin Filled	AC/DC 12V	SMD2835*540pcs	45W	RGB/RGBW/ Single Color	Switch / App/Remote / WiFi /DMX512

Installation Diagram

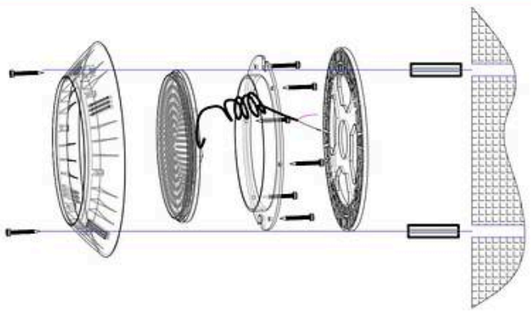



316Lss Recessed LED Pool Light

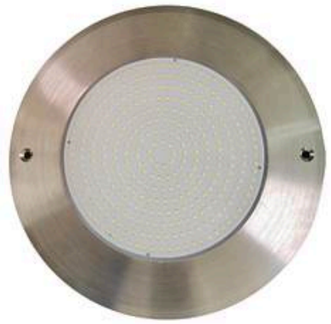





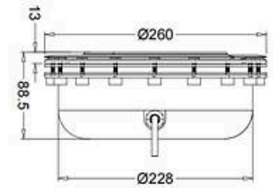

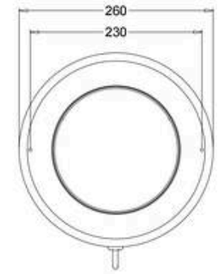

Specifications

- IP68 epoxy sealing, anti-fog, anti-condensation & chemical resistance
- 316L stainless steel ring, rust resistant, compatible with standard PAR56 niches
- Standard PAR56 size, replaces 95% conventional halogen pool lights
- Built-in thermal protection against overheating damage
- Multi-color modes with multi-lamp sync, no extra adapters needed
- AC12V/DC12V low voltage, meets international pool safety standards
- Four control modes for household and commercial use
- CE & RoHS certified, 2-year full warranty

Model No.	Dimension	Material	Voltage	LED	Power	Color	Control
GR-PAR56-SS260-25W	Φ260mm*30mm	ABS+ Resin Filled	AC/DC 12V	SMD2835*336pcs	25W	RGB / RGBW / Single Color	Switch / App/Remote / WiFi /DMX512
GR-PAR56-SS260-35W	Φ260mm*30mm	ABS+ Resin Filled	AC/DC 12V	SMD2835*441pcs	35W	RGB / RGBW / Single Color	Switch / App/Remote / WiFi /DMX512
GR-PAR56-SS260-45W	Φ260mm*30mm	ABS+ Resin Filled	AC/DC 12V	SMD2835*540pcs	45W	RGB / RGBW / Single Color	Switch / App/Remote / WiFi /DMX512

Installation Diagram

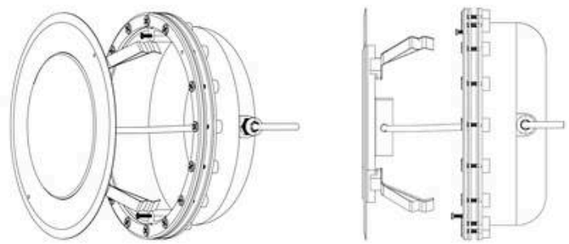



Green Element

ABS Wall-mounted LED Pool Light







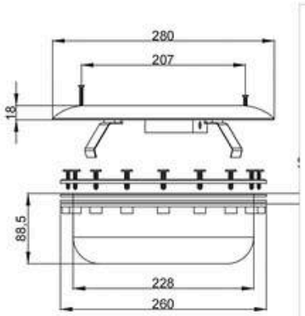

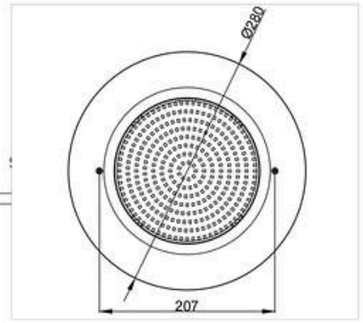

Specifications

- IP68 epoxy sealing, anti-fog, anti-condensation & chemical resistance
- ABS cover ring, rust resistant, compatible with standard PAR56 niches
- Standard PAR56 size, replaces 95% conventional halogen pool lights
- Built-in thermal protection against overheating damage
- Multi-color modes with multi-lamp sync, no extra adapters needed
- AC12V/DC12V low voltage, meets international pool safety standards
- Four control modes for household and commercial use
- CE & RoHS certified, 2-year full warranty

Model No.	Dimension	Material	Voltage	LED	Power	Color	Control
GR-PAR56-280-25W	Φ280*30mm	ABS+ Resin Filled	AC/DC 12V	SMD2835*336pcs	25W	RGB / RGBW / Single Color	Switch / App/Remote / WiFi /DMX512
GR-PAR56-280-35W	Φ280*30mm	ABS+ Resin Filled	AC/DC 12V	SMD2835*441pcs	35W	RGB / RGBW / Single Color	Switch / App/Remote / WiFi /DMX512
GR-PAR56-280-45W	Φ280*30mm	ABS+ Resin Filled	AC/DC 12V	SMD2835*540pcs	45W	RGB / RGBW / Single Color	Switch / App/Remote / WiFi /DMX512

Installation Diagram

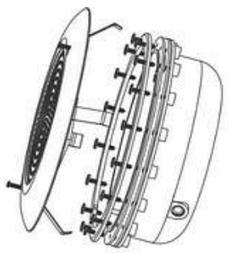

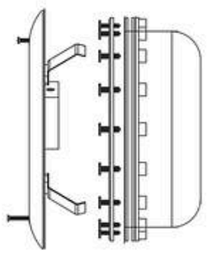



Integrated Wall-mounted LED Pool Light







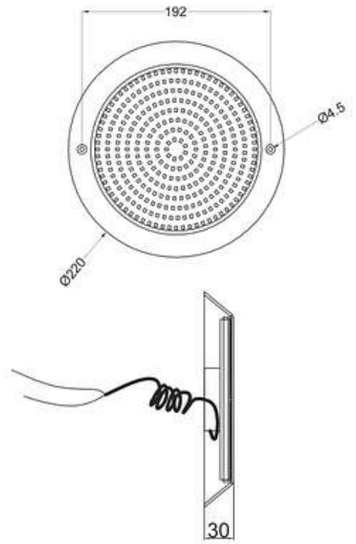

Specifications

- Fully resin filled for IP68 waterproofing, anti-fog and chemical resistant.
- ABS casing allows direct wall mounting, with customizable bezel colors.
- Standard PAR56 size fits most old halogen pool light positions.
- Built-in thermal protection against overheating damage
- AC12V/DC12V voltage standard for pool, multi-lamp color synchronization.
- Four control options suit domestic and commercial pool projects.
- 50,000-hour lifespan with 2-year warranty.CE & RoHS certified .

Model No.	Dimension	Material	Voltage	LED	Power	Color	Control
GR-PAR56-220-25W	Φ220*30mm	PC+Resin Filled	AC/DC 12V	SMD2835*336pcs	25W	RGB / RGBW / Single Color	Switch / App/Remote / WiFi /DMX512
GR-PAR56-220-35W	Φ220*30mm	PC+Resin Filled	AC/DC 12V	SMD2835*441pcs	35W	RGB / RGBW / Single Color	Switch / App/Remote / WiFi /DMX512
GR-PAR56-220-45W	Φ220*30mm	PC+Resin Filled	AC/DC 12V	SMD2835*540pcs	45W	RGB / RGBW / Single Color	Switch / App/Remote / WiFi /DMX512

Installation Diagram

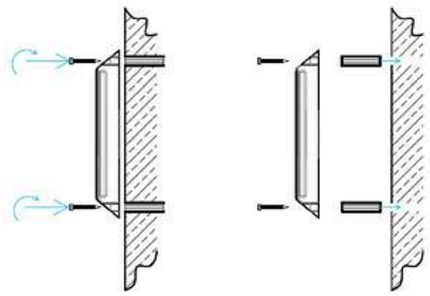



Green Element





D110 316LSS Surface-mounted LED Pool Light

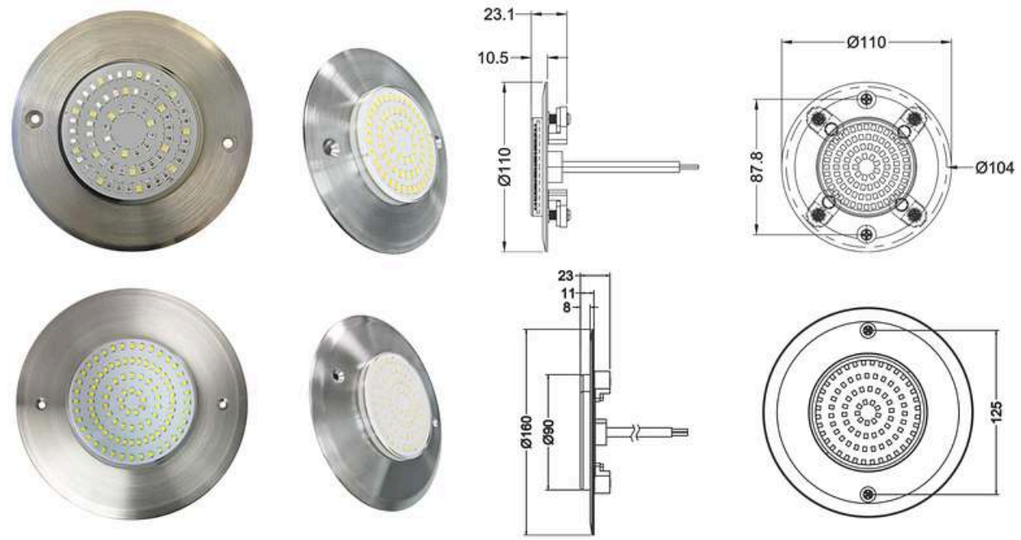

Specifications

- 4-3/8" & 6-5/16" 8mm slim round lights
- IP68 Waterproof | 316L SS frame
- 50,000-hour SMD LED, DC12V safe voltage
- Sync multi-color lighting, easy wall screw mount
- CE/RoHS certified, 2-year warranty

Model No.	Dimension	Material	Voltage	LED	Power	Color	Control
GR-8mm-SS110-5W	Φ110*8mm	316LSS+Resin Filled	DC12V	SMD2835*52pcs	5W	RGB / RGBW / Single Color	Switch / App/Remote / WiFi /DMX512
GR-8mm-SS110-10W	Φ110*8mm	316LSS+Resin Filled	DC12V	SMD2835*74pcs	10W	RGB / RGBW / Single Color	Switch / App/Remote / WiFi /DMX512
GR-8mm-SS160-10W	Φ160*8mm	316LSS+Resin Filled	DC12V	SMD2835*99pcs	10W	RGB / RGBW / Single Color	Switch / App/Remote / WiFi /DMX512

Installation Diagram

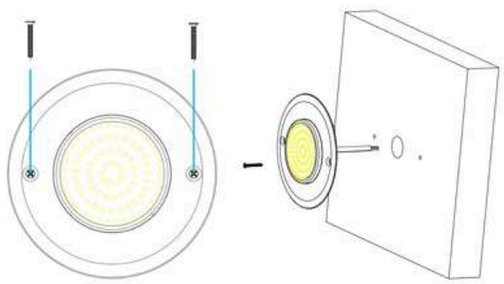



D245 316LSS Surface-mounted LED Pool Light

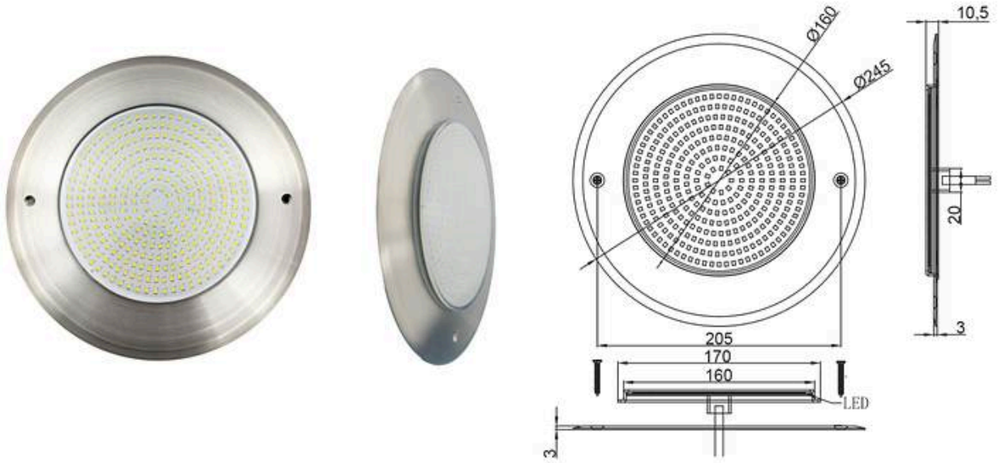

Specifications

- 9-21/32" 8mm ultra slim round fixture
- IP68 waterproof, 316L stainless steel frame
- Long-life SMD LED, DC12V low voltage
- Synchronous RGB/RGBW multi-color lighting
- Simple screw-on pool wall installation
- CE & RoHS certified with 2-year warranty

Model No.	Dimension	Material	Voltage	LED	Power	Color	Control
GR-8MM-SS245-25W	Φ245*8mm	316LSS+Resin Filled	DC12V	SMD2835*315pcs	25W	RGB / RGBW / Single Color	Switch / App/Remote / WiFi /DMX512
GR-8MM-SS245-35W	Φ245×8mm	316LSS+Resin Filled	DC12V	SMD2835*531pcs	35W	RGB / RGBW / Single Color	Switch / App/Remote / WiFi /DMX512

Installation Diagram

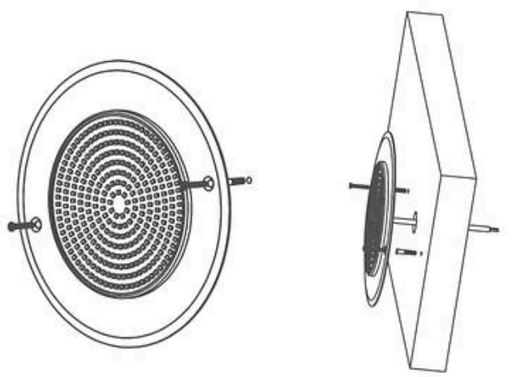



D260 316LSS Surface-mounted LED Pool Light





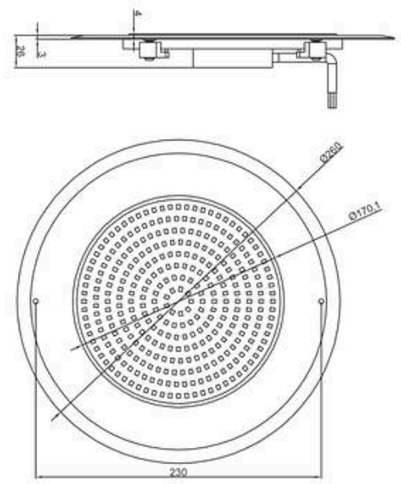

Specifications

- 10-1/4" Ultra slim 8mm Thin Profile, IP68 Waterproof Rating
- 316L stainless steel frame, black backplate optional
- High-bright SMD LED with 50,000hrs lifespan
- Safe DC12V low voltage for pool use
- Synchronized multi-color lighting for multiple lamps
- Simple screw mounting on pool wall
- CE & RoHS certified, 2-year warranty

Model No.	Dimension	Material	Voltage	LED	Power	Color	Control
GR-8MM-SS260-25W	Φ260*8mm	316LSS+Resin Filled	DC12V	SMD2835*324pcs	25W	RGB / RGBW / Single Color	Switch / App/Remote / WiFi /DMX512
GR-8MM-SS260-35W	Φ260*8mm	316LSS+Resin Filled	DC12V	SMD2835*441pcs	35W	RGB / RGBW / Single Color	Switch / App/Remote / WiFi /DMX512
GR-8MM-SS260-45W	Φ260*8mm	316LSS+Resin Filled	DC12V	SMD2835*540pcs	45W	RGB / RGBW / Single Color	Switch / App/Remote / WiFi /DMX512

Installation Diagram

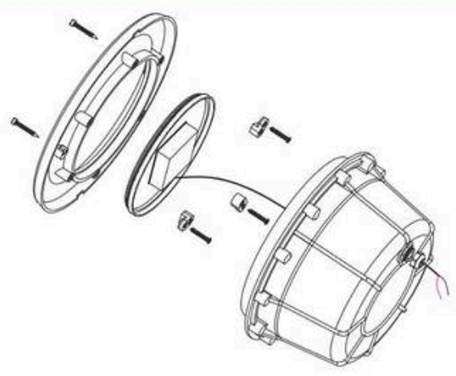



Green Element

D195 ABS Surface-mounted LED Pool Light



Specifications

- 7- 11/16" 8mm ultra-flat round light
- IP68 waterproof, sealed ABS housing, color customizable
- DC12V SMD LED, 50,000-hour lifespan
- Multi-color & multi-lamp synchronous lighting
- Direct screw mount on pool wall
- CE & RoHS certified, 2-year warranty

Model No.	Dimension	Material	Voltage	LED	Power	Color	Control
GR-8MM-PC195-25W	Φ192*8mm	ABS+Resin Filled	DC12V	SMD2835*315pcs	25W	RGB/RGBW /Single Color	Switch / Remote / DMX512 /
GR-8MM-PC195-35W	Φ192*8mm	ABS+Resin Filled	DC12V	SMD2835*540pcs	35W	RGB/RGBW /Single Color	Switch / Remote / DMX512 /

Installation Diagram

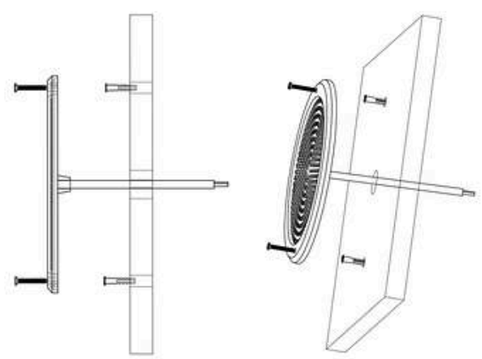



D100 ABS Surface-mounted LED Pool Light

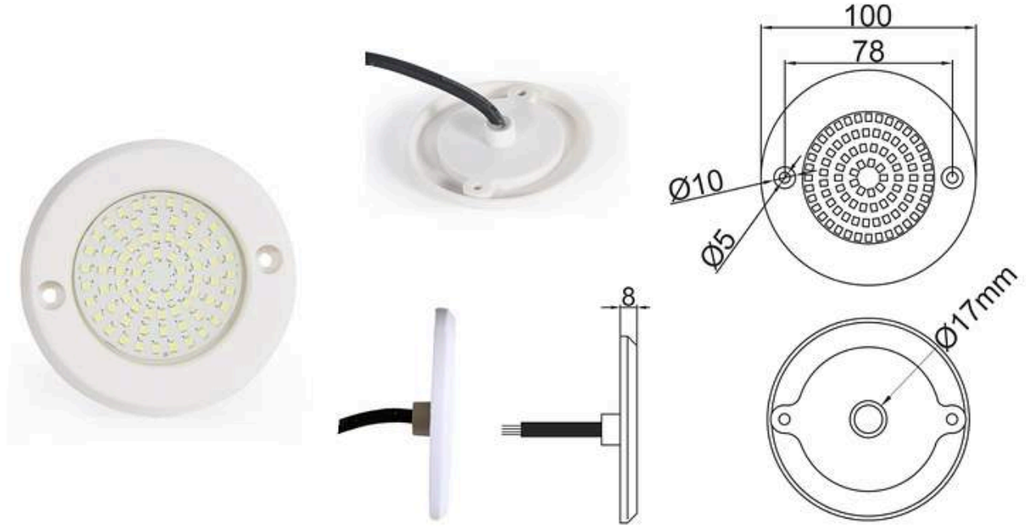

Specifications

- 4-3/8" 8mm ultra-flat round pool light
- ABS housing with front glue waterproof sealing, customize colors available
- DC12V high-bright SMD LED, 50,000-hour lifespan
- Multi-color effects and group synchronous lighting
- Direct screw-on mounting on pool wall
- CE & RoHS certified, 2-year warranty

Model No.	Dimension	Material	Voltage	LED	Power	Color	Control
GR-8mm-PC100-5W	Φ100*8mm	ABS+Resin Filled	DC12V	SMD2835*52pcs	5W	RGB / RGBW / Single Color	Switch / App/Remote / WiFi /DMX512
GR-8mm-PC100-10W	Φ100*8mm	ABS+Resin Filled	DC12V	SMD2835*74pcs	10W	RGB / RGBW / Single Color	Switch / App/Remote / WiFi /DMX512

Installation Diagram

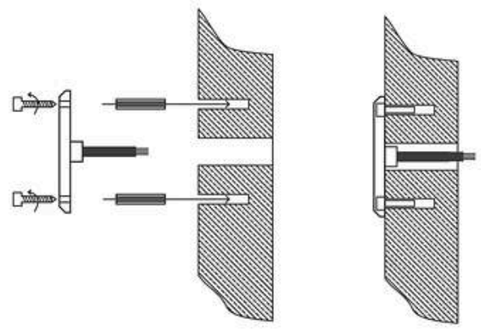



Green Element

DJ Liner LED Pool Light



Specifications

- Fully epoxy-encapsulated, IP68-rated; superior resistance to chlorine and saltwater corrosion.
- Compatible with Desjoyaux liner pool lamps for direct replacement
- Compact & lightweight, tailored for recessed mounting on vinyl liner pools, perfect for small&medium pools
- AC12V/DC12V input; complies with international safety standards for underwater lighting.
- Import LED chip ensures uniform illumination and extended lifespan.
- RGB, RGBW, and single-color modes with multi-unit synchronous capability.
- CE/RoHS certified; 2-year warranty.

Model No.	Dimension	Material	Voltage	LED	Power	Color	Control
GR-LN50DJ-3W	Φ70* 55mm	ABS+Resin Filled	AC/DC 12V	SMD2835*71pcs	3W	RGB / RGBW / Single Color	Switch / App/Remote / WiFi /DMX512

Installation Diagram



DJ PAR56 Recessed LED Pool Light



Specifications

- Standard PAR56 dimension same as traditional halogen PAR56 bulbs.
- Universally fits over 95% mainstream PAR56 lamp housings from various brands, direct replacement for DESJOYAUX fixtures.
- Fully resin filled, IP68 waterproof rating, anti-chlorine and anti-salt corrosion performance.
- Slim profile optimized for recessed mounting within vinyl liner swimming pools.
- AC12V/DC12V voltage input, ensuring safe long-term underwater
- Compatible with RGB, RGBW, single color and multi-lamp synchronous lighting.
- CE & RoHS certified, 2-year warranty.

Model No.	Dimension	Material	Voltage	LED	Power	Color	Control
GR-PAR56DJ-25W	Φ275*30mm	ABS+ Resin Filled	AC/DC 12V	SMD2835*336pcs	25W	RGB / RGBW / Single Color	Switch / App/Remote / WiFi /DMX512
GR-PAR56DJ-35W	Φ275*30mm	ABS+ Resin Filled	AC/DC 12V	SMD2835*441pcs	35W	RGB / RGBW / Single Color	Switch / App/Remote / WiFi /DMX512
GR-PAR56DJ-45W	Φ275*30mm	ABS+ Resin Filled	AC/DC 12V	SMD2835*540pcs	45W	RGB / RGBW / Single Color	Switch / App/Remote / WiFi /DMX512

Installation Diagram

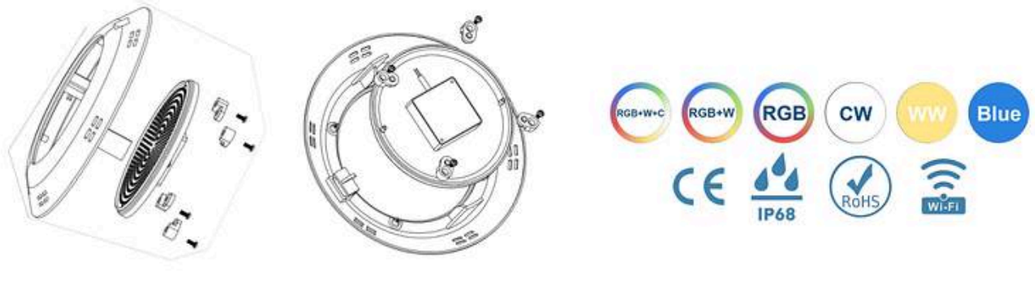

Green Element

LED Fountain Light

Fully Resin Filled LED Fountain Light



GR-LED Fountain Light - 5W
Dimension: Ø100mm*10mm
Hole: Ø15/30/50/90mm
Material: black resin filled
Quantity of LED: 81PCS LEDs
Voltage: DC12
Color: single color, RGB
Power: 5W
Advantage: resistant to chlorine, salt and pool chemicals



GR-LED Fountain Light - 10W
Dimension: Ø120mm*10mm
Hole: Ø15/30/50/90mm
Material: clear resin filled
Quantity of LED: 81PCS LEDs
Voltage: DC12
Color: single color, RGB
Power: 10W
Advantage: resistant to chlorine, salt and pool chemicals

304SS/316LSS LED Fountain Light



GR-LED Fountain Light - 12W
Dimension: Ø185mm*73mm
Hole: 50mm
Material: 304SS/316LSS stainless steel
Quantity of LED: 12PCS LEDs
Voltage: DC24V/AC24V
Color: single color, RGB
Power: 12W
Advantage: resistant to salt and pool chemicals



LED Fountain Light

GR-Solar Floating LED Light
Model: NI-MH AAA600MH
Power: 1.2V
Color: R/G/B/CW/WW







GR-LED Fountain Light
Beam Angle: 15°/30°/45°/60°/90°
Power: 1/2/3W Each lamp

IP68 Underwater Step Light
Light Source:1×1.5W/1×2.5W
Color: Single Color
Beam Angle:15°/45°
Input:12VDC/24VDC

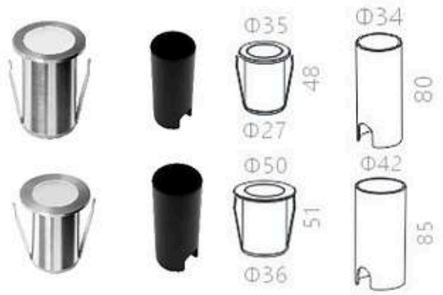



Garden Light
Light Source:3×1W/3×3W
Color: Single Color,RGB/RGBW
Beam Angle:15°/30°/45°/60°
Input:24VDC



Top Swimming Pool Sand Filter



- Made of anti-corrosive reinforced laminated polyester.
-Smooth and high brightness appearance.

- 6-way multiport valve.
- Sight glass for inspection of filtered water.
- Easy maintenance and cleaning

Maximum Working Pressure
250kpa/36psi(2.5bar)

Factory Testing Pressure
400kpa/58psi(4.0bar)

Maximum Temperature
50°C(122F)

Size of Gravel
0.5mm~0.8mm

Model	Filter Diameter (mm)	Filter Height (mm)	Design Flow (m³/h)	Filter Area (m²)	Connections in/(mm)	Required D.E (kg)
GR-lp400	400	670	6	0.13	1.5"/50	30
GR-lp450	450	815	8	0.16	1.5"/50	45
GR-lp500	500	855	10	0.20	1.5"/50	80
GR-lp650	635	865	15	0.32	1.5"/50	130
GR-lp700	700	995	19	0.38	1.5"/50	190
GR-lp800	800	1145	25	0.50	2"/63	300
GR-lp900	900	1270	32	0.64	2"/63	450

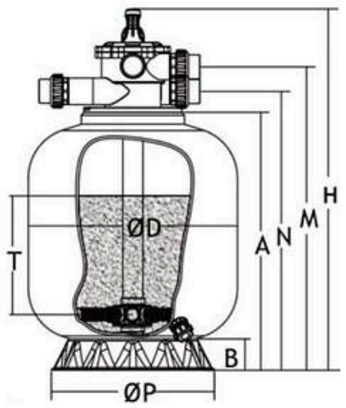

Dimensions	lp400	lp450	lp500	lp650	lp700	lp800	lp900
⌀D(mm)	400	450	500	635	700	800	900
H(mm)	670	815	855	865	995	1145	1270
A(mm)	420	565	605	615	745	845	970
B(mm)	73	75	75	95	95	150	150
M(mm)	529	674	714	724	854	988	1113
N(mm)	470	615	655	665	795	908	1033
⌀P(mm)	390	390	390	565	565	790	790
T(mm)	160	230	260	300	400	500	550

Side Swimming Pool Sand Filter



- Made of anti-corrosive reinforced laminated polyester.
-Smooth and high brightness appearance.

- 6way multiport valve.
- Sight glass for inspection of filtered water.
- Easy maintenance, easy to clean.

Maximum Working Pressure
250kpa/36psi(2.5bar)

Factory Testing Pressure
400kpa/58psi(4.0bar)

Maximum Temperature
50°C(122F)

Size of Gravel
0.5mm~0.8mm

Model	Filter Diameter (mm)	Filter Height (mm)	Design Flow (m³/h)	Filter Area (m²)	Connections in /(mm)	Required D.E (kg)
GR-ls450	450	660	8	0.16	1.5"/50	45
GR-ls500	500	745	10	0.20	1.5"/50	80
GR-ls650	630	805	15	0.32	1.5"/50	130
GR-ls700	700	885	19	0.38	1.5"/50	190
GR-ls750	750	1000	22	0.44	2"/63	320
GR-ls800	800	1000	25	0.50	2"/63	260
GR-ls900	900	1115	32	0.64	2"/63	400

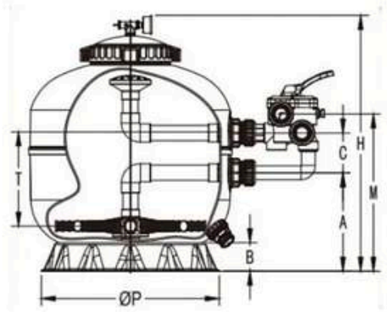

Model	lp450	lp500	lp650	lp700	lp750	lp800	lp900
⌀D(mm)	450	500	630	700	750	800	900
H(mm)	660	745	805	885	1000	1000	115
A(mm)	260	280	310	360	385	385	430
B(mm)	75	75	95	90	95	150	150
C(mm)	125	125	125	125	220	220	220
M(mm)	444	464	494	544	680	680	725
⌀P(mm)	390	390	565	565	565	790	790
T(mm)	250	280	300	350	400	420	480

Paper Cartridge Sand Filter





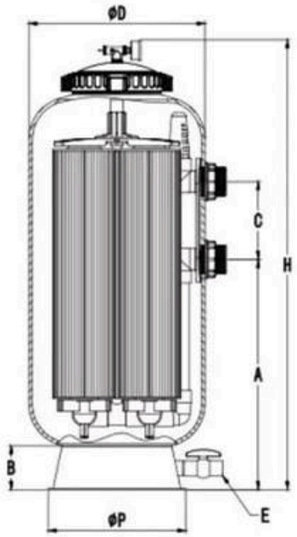

Filter Diameter (mm)	Filter Height (mm)	Design Flow (m³/h)	Filter Area (m²)	Connections in/(mm)	Required D.E (kg)	ØD (mm)	H (mm)	A (mm)	B (mm)	C (mm)	ØP (mm)	E (mm)
500	956	19.0	20.9	2"/63	-	500	956	341	125	220	390	32
500	956	21.3	23.2	2"/63	-	500	956	341	125	220	390	32
500	1270	32.3	35.3	2"/63	-	500	1270	646	125	220	390	32
500	1270	34.0	41.8	2"/63	-	500	1270	646	125	220	390	32
500	1270	36.5	44.8	2"/63	-	500	1270	646	125	220	390	32
500	956	15.9	3.2	2"/63	15.9	500	956	341	125	220	390	32
500	956	20.4	4.1	2"/63	2.04	500	956	341	125	220	390	32

IP68 LED Pool Strip Light

IP68 Silicone Swimming Pool Strip



Application:
1.Swimming Pool
2.Fountain
3.Building Decoration
4.Car Decoration
5.Amusement park and theater lighting
6.Emergency hallway lighting
7.Shopping mall
8.Restaurant, hotel
9.Meeting room
10.Advertisement lighting deoration

IP68 LED Strip Light for Swimming Pool
Warranty: 2 Years
Material: soft resin filled
Quantity of LED: 120/60 PCS LEDs
Input Voltage: DC12V
Color: RGB/RGBW/white/blue
Power: 10W/M
Advantage: resistant to chlorine, salt and pool chemicals



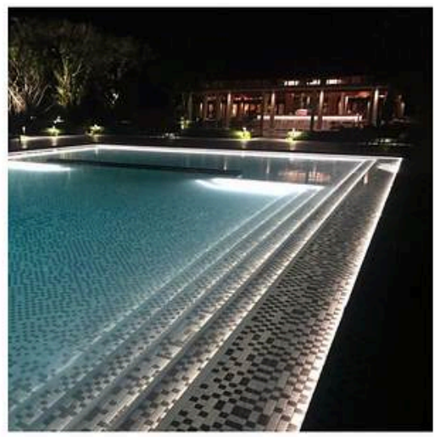

Advantage
1.Milky white and color silicone jacket design
2.Dome surface, continuous and uniform lighting, no LED spots or dark spots.
3.Extremely flexible
4.100% waterproof (IP68 level)
5.100% breakage free
6.Low voltage or line voltage options
7. Durability, impact resistant, weather resistant, minimal heat output (safe to touch)
8.Longer lifespan 50,000 hours
9.Easy to install (can be cut on site)
10.Extremely low maintenance costs

Swimming Pool Water Pump





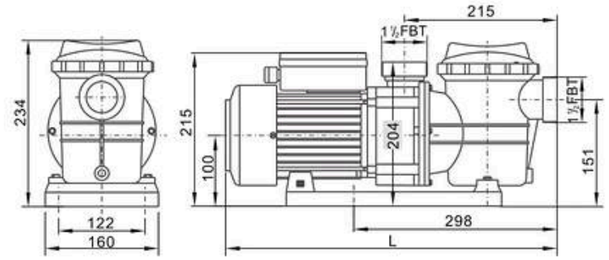

型号 Model	L
STP25	443
STP35	443
STP50	443
STP75	465
STP100	465
STP120	465

序号 NO.	名称 Name	
1	接头螺母	Tie-in Nut
2	接 头	Tie
3	O形圈	O-Ring
4	放水螺塞	Drainge Plug
5	O形圈	O-Ring
6	六角头螺栓和平垫圈组合件 Hexagon head bolt and plain washer assembling	
7	泵 盖	Pump Cover
8	滤 篮	Filter
9	透视盖胶垫 Transparent cover pad	
10	透视盖	Transparent Cover
11	扳 手	Spanner
12	O形圈	O-Ring
13	盖 板	Cover panel
14	十字槽盘头自攻螺钉 Cross recessed pan head tapping screws	
15	叶轮螺母	Impeller Nut
16	弹簧垫圈	Spring washer

序号 NO.	名称 Name	
17	O形圈	O-Ring
18	平键	Flat Key
19	叶 轮	Impeller
20	机械密封	Mechanical seal
21	泵 壳	Pump Casing
22	电 机	Motor
23	底板胶条	Block Gine
24	六角头螺栓	Hexagon bolt
25	平垫圈	Washer
26	底 板	Base

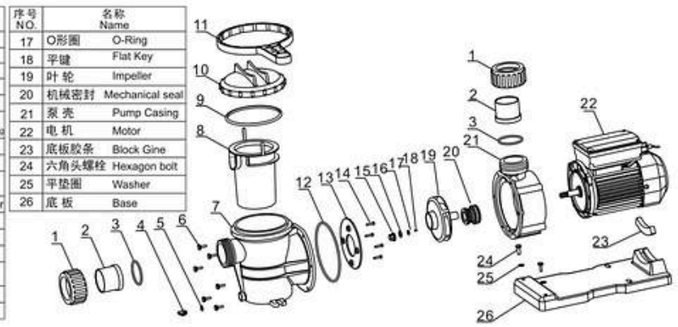

Model	Qmax (l/min)	Hmax (m)	Voltage/ Frequency (V/Hz)	Power(P1) KW/HP	Current (Amps)	Fitting Size (mm)	G.W (KG)	Packing Size (mm)
GR-STP25	140	5	220-240/50	0.18/0.25	0.9	48.5 or 50	9.6	470*180*295
GR-STP35	160	8		0.25/0.35	1.6		10.7	
GR-STP50	210	11		0.37/0.5	2.0		11.3	
GR-STP75	240	10.5		0.55/0.75	3.2		12.5	495*195*295
GR-STP100	275	11		0.75/1.0	3.8		13	
GR-STP120	300	13		0.9/1.2	4.6		13.8	

Swimming Pool Water Pump



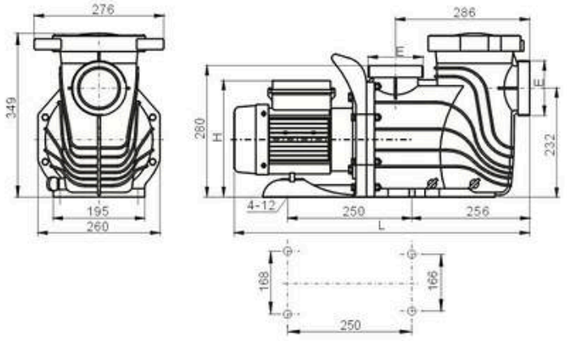

型号 Model	L	H	E
SFE200	625	236.5	2.5FBT or 4.5BUTT
SFE300	642	254	
SFE400	656	257	
SFE400S	656	257	



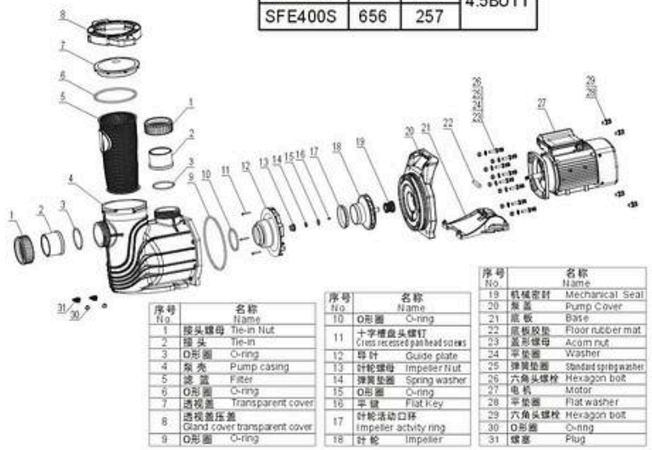

序号 No.	名称 Name	
1	接头螺母	Tie-in Nut
2	接 头	Tie-in
3	O形圈	O-ring
4	泵 壳	Pump casing
5	滤 篮	Filter
6	O形圈	O-ring
7	透视盖	Transparent cover
8	透视盖压盖 Gland cover transparent cover	
9	O形圈	O-ring
10	O形圈	O-ring
11	十字槽盘头螺钉 Cross recessed pan head screws	
12	导 叶	Guide plate
13	叶轮螺母	Impeller Nut
14	弹簧垫圈	Spring washer
15	O形圈	O-ring
16	平 键	Flat Key
17	叶轮活动口环 Impeller activty ring	
18	叶 轮	Impeller
19	机械密封	Mechanical Seal
20	泵 盖	Pump Cover
21	底 板	Base
22	底板胶垫	Floor rubber mat
23	盖形螺母	Acorn nut
24	平垫圈	Washer
25	弹簧垫圈	Standard springwasher
26	六角头螺栓	Hexagon bolt
27	电 机	Motor
28	平垫圈	Flat washer
29	六角头螺栓	Hexagon bolt
30	O形圈	O-ring
31	螺塞	Plug

Model	Qmax (l/min)	Hmax (m)	Power(P1) KW/HP	Voltage/ Frequency (V/Hz)	Fitting Size (mm)		G.W (KG)	Packing Size (mm)
					2.5 FBT	4.5 BUTT		
GR-SFE200	560	20	1.5/2	220-240/50	73 75 60.3 63	73 75 76 88.9 90	27.5	700*305*440
GR-SFE300	715	22	2.2/3				30.5	700*305*440
GR-SFE400	800	23	3/4				32.5	715*305*440
GR-SFE400S	980	19	3/4				31	715*305*440

Green Element



GR-PJV17D-01

Rechargeable Electric Vacuum Cleaner for Spa and Small pool w/Strong suction.
Charging: 5V/1A
Battery Capacity: 4000mAh
Charging Time: 4.5 hours
Working Time: 60 minutes
Suction: 32L/Min
Package: BOX/CBX

GR-PJV17D

Rechargeable Electric Vacuum Cleaner for Spa and Small pool with telescopic pole.
Charging: 5V/1A
Battery Capacity: 4000mAh
Charging Time: 4.5 hours
Working Time: 60 minutes
Suction: 32L/Min
Package: BOX/CBX





GR-PJV21A

Rechargeable Multi-Function Amphibious Cleaner with Side Vacuum Head and Round Brush. Designed to be bendable to a new angle for easy cleaning
Charging: 5V/1A
Battery Capacity: 4000mAh
Charging Time: 4.5 hours
Working Time: 60 Minutes
Suction: 32L/Min
Package: BOX/CBX

GR-PJV20E

Rechargeable handheld pool/spa cleaner, transparent filter, dual grip options, heavy-duty handle, and 3-section telescopic pole (extends to 2.3m).
Charging: 5V/2A
Battery Capacity: 4500mAh
Charging Time: 3 hours
Working Time: 1 hour
Suction: 70L/Min
Package: BOX/CBX









GR-PAC08

Deluxe Automatic Pool Cleaner with Diaphragm, Includes 32ft Vacuum Hose Sections.
Requires a pump of minimum 0.75HP/550W (or minimum flow of 6.5m³/hr/1700gal/hr). Suitable for in-ground pools, cleans the pool bottom and walls
Package: CBX

GR-PJV24A

Rechageable Handhold Pool and Spa Cleaner with Large Debris Filter, Telescopic Pole and Two Suction Power Levels.
Charging: 8.4V/2A
Battery capacity: 4500mAh
Charging time: 3 hours
Standard model working time: 1.5 hours
High model working time: 1 hour
Suction power/discharge capacity: Standard model 70L/MIN,High model 100L/MIN
Package: BOX/CBX





GR-PJV08D

Premium Handheld Pool Cleaner
Charging: 5V/3A
Battery Capacity: 5200mAh
Charging Time: 2 hours
Working Time: 1 hour
Suction: 60L/Min
Package: BOX/CBX



GR-PJV28

Premium Handheld Pool Cleaner
Charging: 9V/3A
Battery Capacity: 4500mAh
Charging Time: 2 hours
Working Time: 1 hour
Suction: 100L/Min
Package: BOX/CBX



GR-PDRS1001
Deluxe Deep Rake w/Easy Button
Package: BU/CB



GR-PDRS01B
Heavy Duty Plastic Deep Rake
w/Long Wearing Screen Mesh
w/Butterfly EZ Button
Package: BU/CB/SW



GR-PDRS01W
Heavy Duty Plastic Deep Rake
w/Wheels and EZ Button
Package: BU/CB



GR-PB02
18"/45cm Standard Curved Wall Brush
Package: BU/CB



GR-PB26
Strong Pool Brush with Detachable
Curved Corner Brush
Package: BU/CB



GR-PLS01B
Standard Leaf Skimmer
Package: BU/CB



GR-PVH13/18"
18" Aluminium Folding Vacuum
Head w/Swivel Handle and EZ-Clip
Package: BU/WBX/CBX



GR-PVH23/18" or 23/14"
18" Economy Aluminium Vacuum
Head
Package: WBX



GR-PCF03A
9lbs (4kgs) Inline Chlorine Feeder Kit
Package: WBX



GR-PCF03B
9lbs (4kgs) Offline Chlorine Feeder Kit
Package: WBX



GR-PWS01
Standard Wall Skimmer for Above
Ground Pools
Package: WBX



GR-PWS01-1
Standard Wall Skimmer for Above
Ground Pools
w/Winter Closure System
Package: WBX

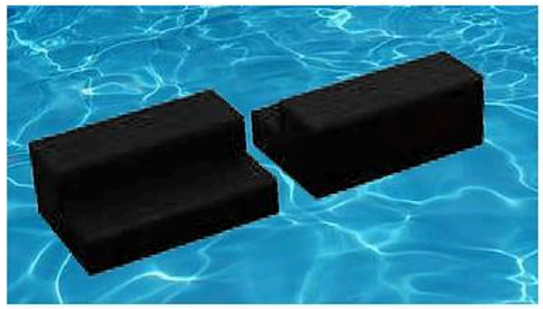



GR-PSL02-BK
Hot Tub and Spa Non-slip Steps with
Storage（Color: Black)
Package: BX

Pool Cleaning Equipment



GR-PWS02
Wide Mouth Wall Skimmer for Above Ground Pools
Package: WBX



GR-PWS-HAY-01C
Wall Skimmer w/Square Frame and Round Lid for Concrete Pool
Package: WBX



GR-PWS10-2
Wall Mounter Skimmer with Adjustable Hook-2ways
Package: WBX/CBX



GR-PWS10-3
Eco Wall Mounter Skimmer with Adjustable Hook-2ways
Package: WBX/CBX



Power Supply&Controller



WiFi Controller DC12-36V



2.4G Wireless Sync RGBCCT 3-in-1 LED Controller

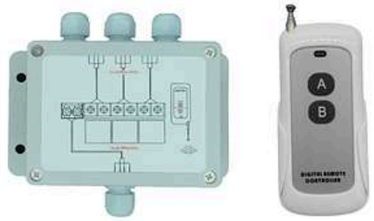

AC12V Remote Controller



60W/100W Waterproof DC12V



100W/350W Non-waterproof DC12V



Remote Dimmer

